DANVER STAINLESS OUTDOOR KITCHENS™

Trex® Outdoor Kitchens™

BROWN JORDAN® OUTDOOR KITCHENS™

Specification Guide: Outdoor Kitchen Cabinets

Revision: 01 -21

Table of Contents

Style and Construction 5

Base Storage Cabinets 7

Base Sink Cabinets 12

ADA Base Cabinets - Sink Base 15

Base Trash Cabinets 16

Base Trash Cabinets 17

Grill Storage Cabinets 18

Grill Storage Cabinets - Warming Drawer Insert 24

Appliance Base Cabinets 27

Appliance Base Cabinets - Side Burner Base 28

Appliance Base Cabinets - Bartender/Cocktail Base 31

Appliance Base Cabinets - Egg Base 32

Appliance Base Cabinets - Egg Base 33

Appliance Base Cabinets - Warming Drawer Base 34

Appliance Base Cabinets - Viking Grill and Side Burner Base 35

Specialty Base Cabinets - Corner Base 36

Tall Storage Cabinets 37

Tall Storage Cabinets - TBXXXX 24″ Deep 38

Tall Storage Cabinets - TTXXXX 24″ Deep 39

Cabinet Accessories 41

Cabinet Accessories - Pullout Shelving 42

Cabinet Accessories - Pullout Shelving 43

Cabinet Accessories - Trash Pullout 44

Cabinet Accessories - Under-counter Appliance Spacers 45

Cabinet Accessories - Fillers and Panels 46

Cabinet Accessories - Fillers and Panels 47

Cabinet Accessories - Fillers and Panels 49

Cabinet Accessories - Under-counter Appliance Spacers 51

Cabinet Accessories - Side Panels 56

Cabinet Accessories - Back Panels 60

Cabinet Accessories - Miscellaneous 65

Cabinet Accessories - Miscellaneous 67

Cabinet Accessories - Feet and Toe Kick 70

Cabinet Accessories - Feet and Toe Kick 71

Elements by Tecno™ 74

Elements by Tecno™ 75

Elements by Tecno™ 76

Elements by Tecno™ 77

Elements by Tecno™ 78

Elements by Tecno™ 79

Table of Contents

Wall Cabinets 80

Wall Cabinets - Accessories 87

Island Insert Cabinets 89

Island Insert Cabinets - Access Door 90

Island Insert Cabinets - Clean-Stor® Box with Shelf 91

Island Insert Cabinets - Clean-Stor® Box Drawer Sets 92

Island Insert Cabinets - Accessories 93

Cabinet Door Styles - Danver 94

Cabinet Door Styles - Brown Jordan Outdoor Kitchens 95

Cabinet Door Styles - Trex Outdoor Kitchens 96

Style and Construction

- All standard doors, drawers and cabinet boxes are manufactured from 20g 304 stainless steel or choose to upgrade to 316 marine grade.
- European frameless, solid top construction with full overlay doors.
- Standard 30″ high cabinet boxes plus 4.5″ leveling legs (adjustable from 3.625″ to 6.00″) or 2″ (ADA) leg heights.
- Cabinet depths are standard 27.88″ or optional 24.88″, which includes the door.
- Concealed door hinges, full extension, soft-close drawer glides on residential projects.
- Magnetic door closures and rain gaskets are standard on cabinetry.
- #2 matte finish interior standard on Danver Stainless Outdoor Kitchen cabinets.
- #4 brushed finish interior standard on Brown Jordan Outdoor Kitchen cabinets.

Cabinet Options

- Shelving options: half depth standard, full depth, roll out or heavy duty available.
- Incremental 3″ widths starting at 9″ and heights starting at 12″.
- Available in a variety of door style options.
- Powder coated finishes in solid colors along with woodgrain and stone looks.
- Finished backs and sides are available for stand alone island installations.
- Pre-cut access holes to accommodate plumbing, electrical and required ventilation.

Outdoor Cabinet Nomenclature

All Danver Base cabinets use specific nomenclature designed to help you find the specific type needed.

Standard base cabinet box depth is 27".

For 24" depth cabinets, specify -24 after item #. For example OBF1501-24.

Specify right or left hinge on single door sizes.

Base Cabinet part number nomenclature; example:					
OBF1801-RH: 18" Full Height Door Cabinet					
OB	**F**	**18**	**0**	**1**	**RH**
Base	**Style**	**Width**	**Drawers**	**Doors**	**Hinge**

Category *

Base Style**

Base Width in inches

Number of Drawers

Number of Doors

Left or Right Hand

* Base Category Code Key	
OB	Outside Base
OG	Outside Grill
OE	Outside Egg
OP	Outside Propane Pull-out
OW	Outside Warming
VG	Viking Grill
DC	Diagonal Corner
AE	Angle End
TB	Tall Base
TT	Tall Double Oven
OT	Outside Trash Pull-out
OS	Outside Sidepanel
WS	Wall Side
ID	Insert Door
IC	Insert Combination
IT	Insert Trash Pull-out
IP	Insert Propane Pull-out
IDW	Insert Drawer

** Base Style Code Key	
B	Burner
C	Cocktail Base
F	Full-height Drawer
M	Multi-Drawer Sink
S	Sink
T	Trash
W	Warming Drawer

Base Storage Cabinets

Typical measurements for base storage cabinets.

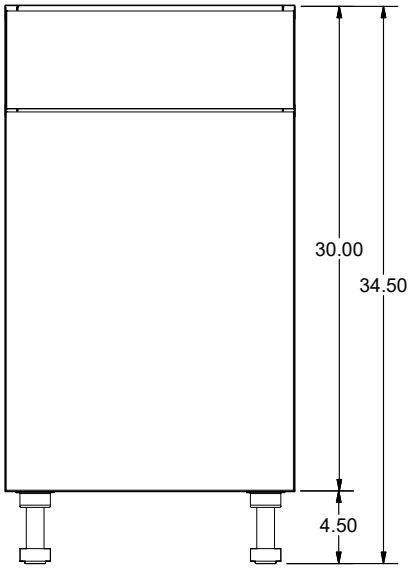

Front View

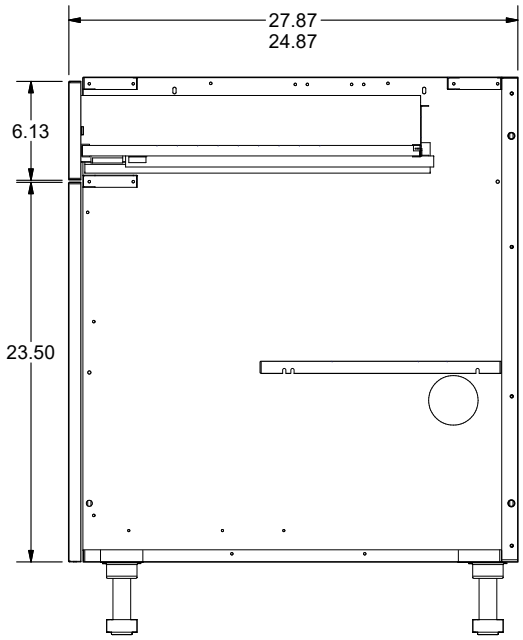

Side View

Typical cabinet foot location.

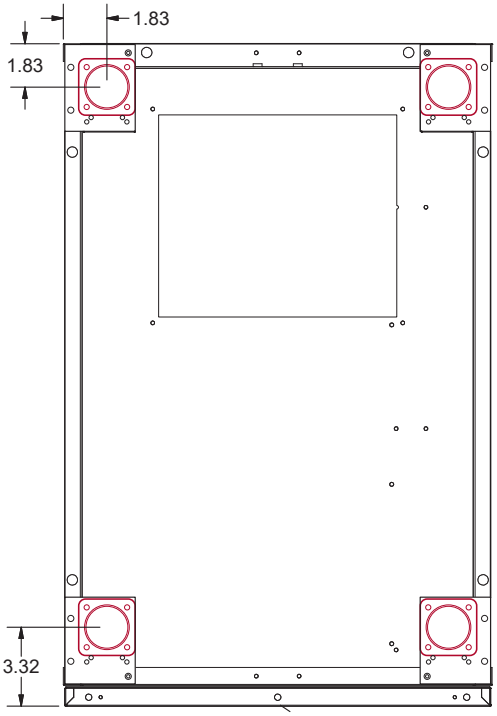

Bottom View

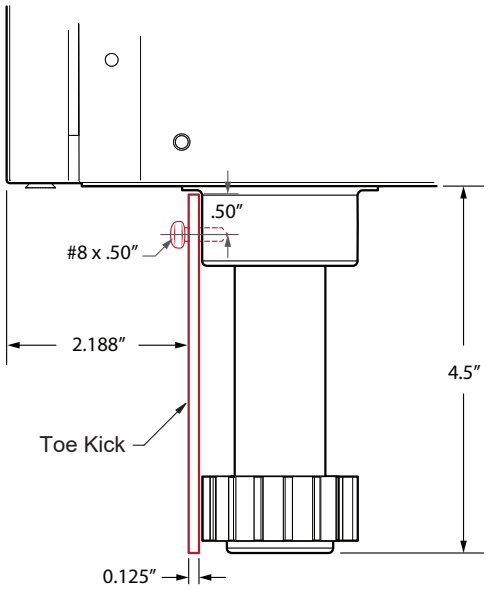

Side View

Base Storage Cabinets

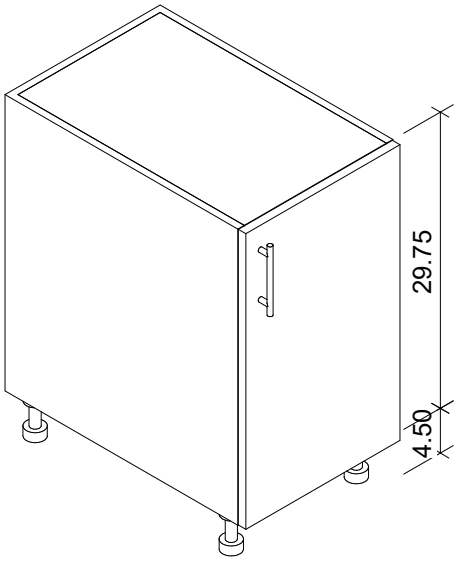

Product Description	
OBF: Full height door base, 1 door, includes half-depth shelf.	
27” Depth SKU	24” Depth SKU
OBF0901-LH	OBF0901-24-LH
OBF0901-RH	OBF0901-24-RH
OBF1201-LH	OBF1201-24-LH
OBF1201-RH	OBF1201-24-RH
OBF1501-LH	OBF1501-24-LH
OBF1501-RH	OBF1501-24-RH
OBF1801-LH	OBF1801-24-LH
OBF1801-RH	OBF1801-24-RH
OBF2101-LH	OBF2101-24-LH
OBF2101-RH	OBF2101-24-RH
OBF2401-LH	OBF2401-24-LH
OBF2401-RH	OBF2401-24-RH

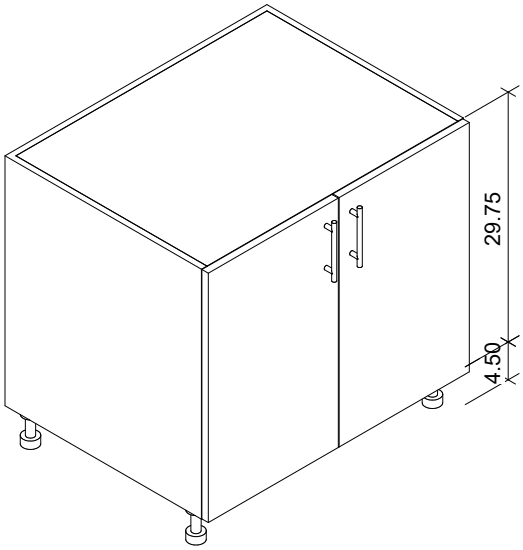

Product Description	
OBF: Full height door base, 2 doors, includes half-depth shelf.	
27” Depth SKU	24” Depth SKU
OBF2402	OBF2402-24
OBF2702	OBF2702-24
OBF3002	OBF3002-24
OBF3302	OBF3302-24
OBF3602	OBF3602-24
OBF3902	OBF3902-24
OBF4202	OBF4202-24
OBF4502	OBF4502-24
OBF4802	OBF4802-24
OBF5202	OBF5202-24

NOTE: Cabinet boxes are 30″ high plus 4.5″ leveling legs or 2″ (ADA) leg heights.

Base Storage Cabinets

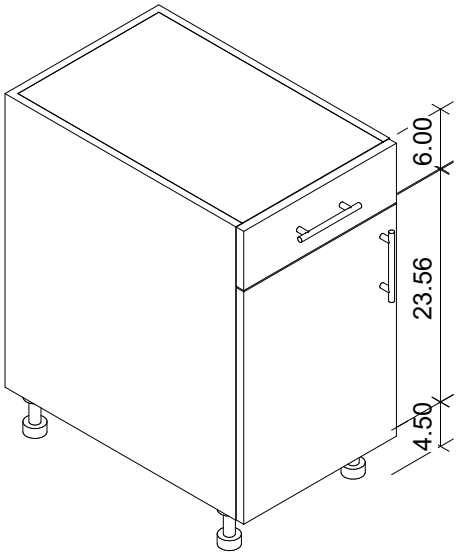

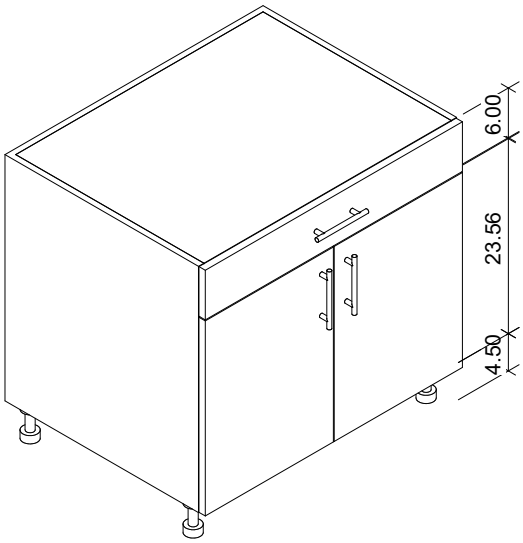

Product Description	
OBF: Open base cabinet, #4 brushed finish, No doors/drawers, no holes on interior,. Includes a fulldepth shelf.	
27” Depth SKU	24” Depth SKU
OBF0900	OBF0900-24
OBF1200	OBF1200-24
OBF1500	OBF1500-24
OBF1800	OBF1800-24
OBF2100	OBF2100-24
OBF2400	OBF2400-24
OBF2700	OBF2700-24
OBF3300	OBF3300-24
OBF3600	OBF3600-24
OBF3900	OBF3900-24
OBF4200	OBF4200-24
OBF4500	OBF4500-24
OBF4800	OBF4800-24
OBF5200	OBF5200-24

Product Description	
OBD: Door/drawer base, 1 door, includes half-depth shelf.	
27” Depth SKU	24” Depth SKU
OBD0911-LH	OBD0911-24-LH
OBD0911-RH	OBD0911-24-RH
OBD1211-LH	OBD1211-24-LH
OBD1211-RH	OBD1211-24-RH
OBD1511-LH	OBD1511-24-LH
OBD1511-RH	OBD1511-24-RH
OBD1811-LH	OBD1811-24-LH
OBD1811-RH	OBD1811-24-RH
OBD2111-LH	OBD2111-24-LH
OBD2111-RH	OBD2111-24-RH
OBD2411-LH	OBD2411-24-LH
OBD2411-RH	OBD2411-24-RH

Product Description	
OBD: Door/drawer base, 1drawer, 2 door includes half-depth shelf	
27” Depth SKU	24” Depth SKU
OBD2412	OBD2412-24
OBD2712	OBD2712-24
OBD3012	OBD3012-24
OBD3312	OBD3312-24
OBD3612	OBD3612-24
OBD3912	OBD3912-24

Base Storage Cabinets

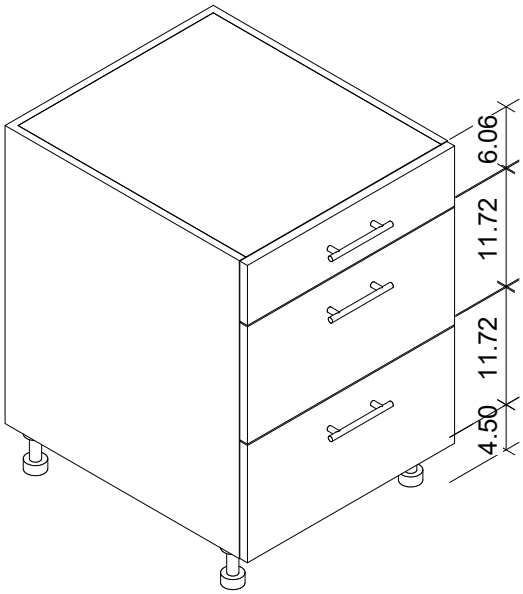

Product Description	
OBM: Drawer Base, 3 drawers	
27” Depth SKU	24” Depth SKU
OBM0930	OBM0930-24
OBM1230	OBM1230-24
OBM1530	OBM1530-24
OBM1830	OBM1830-24
OBM2130	OBM2130-24
OBM2430	OBM2430-24
OBM2730	OBM2730-24
OBM3030	OBM3030-24
OBM3330	OBM3330-24
OBM3630	OBM3630-24

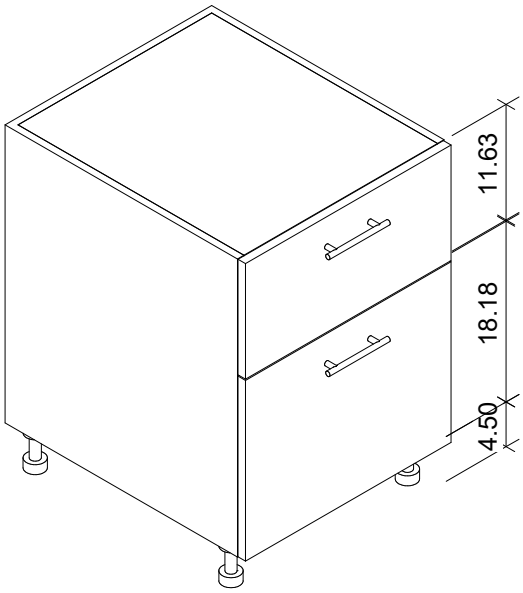

Product Description	
OBM: Outdoor Base 2 Drawer	
27” Depth SKU	24” Depth SKU
OBM0920	OBM0920-24
OBM1220	OBM1220-24
OBM1520	OBM1520-24
OBM1820	OBM1820-24
OBM2120	OBM2120-24
OBM2420	OBM2120-24
OBM2720	OBM2720-24
OBM3020	OBM3020-24
OBM3320	OBM3320-24
OBM3320-HD	Heavy Duty drawer glides to support cooler NOTE: Stores most coolers up to 52 quarts
OBM3620	OBM3620-24

Product Description	
OBM: Outdoor Base 1 Drawer	
27” Depth SKU	24” Depth SKU
OBM0910	OBM0910-24
OBM1210	OBM1210-24
OBM1510	OBM1510-24
OBM1810	OBM1810-24
OBM2110	OBM2110-24
OBM2410	OBM2110-24
OBM2720	OBM2720-24
OBM3020	OBM3020-24
OBM3320	OBM3320-24
OBM3620	OBM3620-24

Base Storage Cabinets

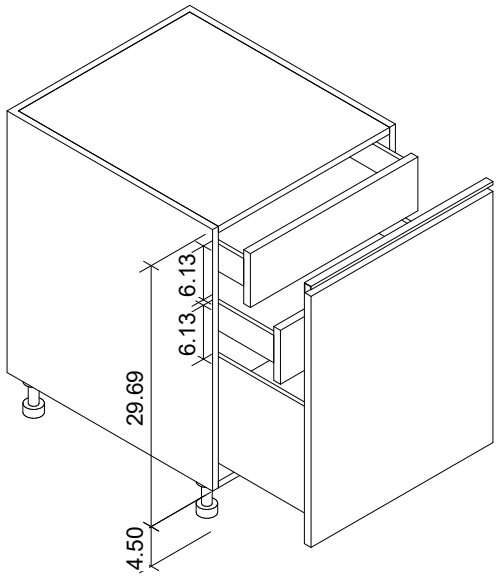

Product Description	
OBM: Outdoor Base Multi-Drawer TECNO, Full-height drawer front with 2 nested drawers NOTE: TECNO is available only in Brown Jordan Outdoor Kitchens line.	
27” Depth SKU	24” Depth SKU
OBM1530 TECNO	OBM1530-24 TECNO
OBM1830 TECNO	OBM1830-24 TECNO
OBM2130 TECNO	OBM2130-24 TECNO
OBM2430 TECNO	OBM2430-24 TECNO
OBM2730 TECNO	OBM1830-24 TECNO
OBM3030 TECNO	OBM3030-24 TECNO

Base Sink Cabinets

All OBS (Base Sink Cabinets) have precut openings in the rear and bottom panels as well as standard side openings for plumbing and electrical conduit.

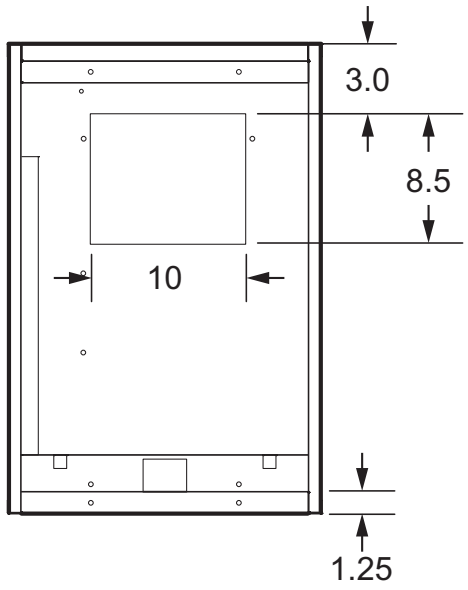

Top View

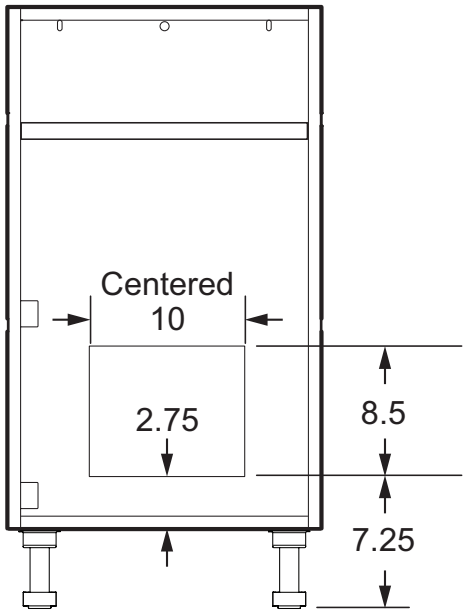

Front View

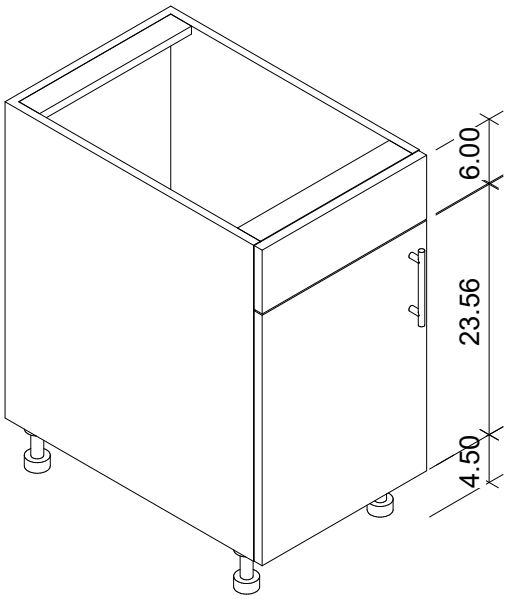

Product Description	
OBS: Outdoor Base Sink False front with single door	
27” Depth SKU	24” Depth SKU
OBS1501-LH	OBS1501-24-LH
OBS1501-RH	OBS1501-24-RH
OBS1801-LH	OBS1801-24-LH
OBS1801-RH	OBS1801-24-RH
OBS2101-LH	OBS2101-24-LH
OBS2101-RH	OBS2101-24-RH
OBS2401-LH	OBS2401-24-LH
OBS2401-RH	OBS2401-24-RH

Base Sink Cabinets

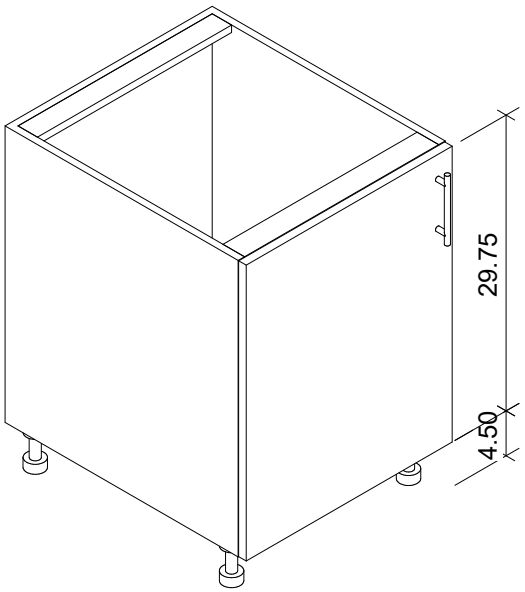

Product Description	
OBS: Outdoor Base Sink Full height single door	
27” Depth SKU	24” Depth SKU
OBS1501-FHD-LH	OBS1501-24-FHD-LH
OBS1501-FHD-RH	OBS1501-24-FHD-RH
OBS1801-FHD-LH	OBS1801-24-FHD-LH
OBS1801-FHD-RH	OBS1801-24-FHD-RH
OBS2101-FHD-LH	OBS2101-24-FHD-LH
OBS2101-FHD-RH	OBS2101-24-FHD-RH
OBS2401-FHD-LH	OBS2401-24-FHD-LH
OBS2401-FHD-RH	OBS2401-24-FHD-RH

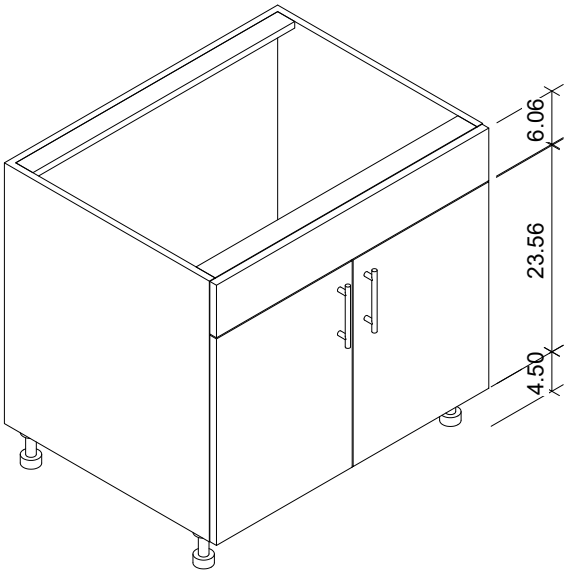

Product Description	
OBS: Outdoor Base Sink False front with double door	
27” Depth SKU	24” Depth SKU
OBS2402	OBS2402-24
OBS2702	OBS2702-24
OBS3002	OBS3002-24
OBS3302	OBS3302-24
OBS3602	OBS3602-24
OBS3902	OBS3902-24
OBS4202	OBS4202-24
OBS4502	OBS4502-24
OBS4802	OBS4802-24

Base Sink Cabinets

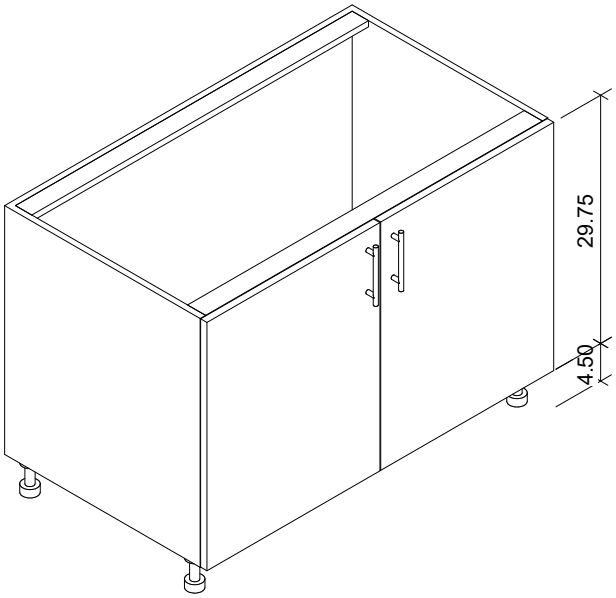

Product Description	
OBS: Outdoor Base Sink Full height double door	
27” Depth SKU	24” Depth SKU
OBS2402-FHD	OBS2402-24-FHD
OBS2702-FHD	OBS2702-24-FHD
OBS3002-FHD	OBS3002-24-FHD
OBS3302-FHD	OBS3302-24-FHD
OBS3602-FHD	OBS3602-24-FHD
OBS3902-FHD	OBS3902-24-FHD
OBS4202-FHD	OBS4202-24-FHD
OBS4502-FHD	OBS4502-24-FHD
OBS4802-FHD	OBS4802-24-FHD

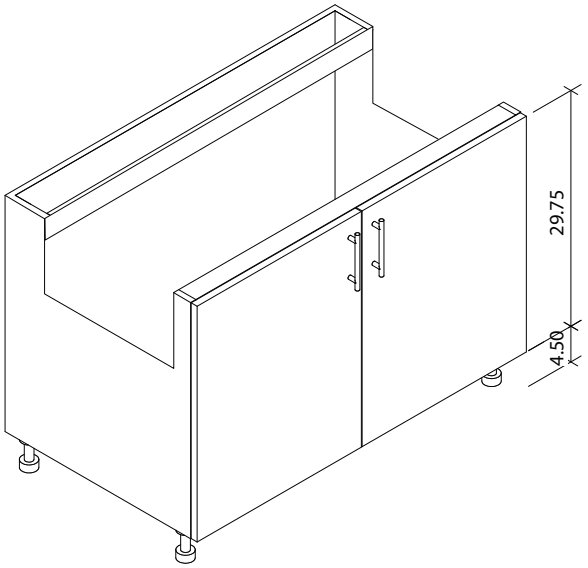

Product Description	
OBS: Outdoor Base Galley Sink	
27” Depth SKU	24” Depth SKU
OBS2402 GALLEY	OBS2402-24 GALLEY
OBS3602 GALLEY	OBS3602-24 GALLEY
OBS4802 GALLEY	OBS4802-24 GALLEY
OBS6003 GALLEY	OBS6003-24 GALLEY
OBS7203 GALLEY	OBS7203-24 GALLEY
OBS8404 GALLEY	OBS8404-24 GALLEY
OBS8404-FHD GALLEY	OBS8404-24-FHD GALLEY

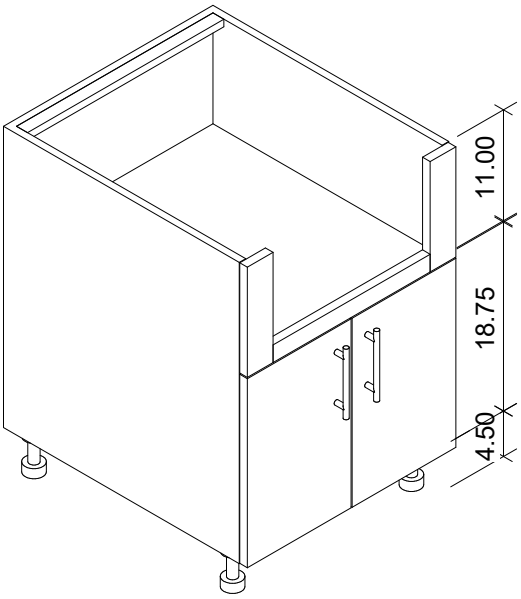

Product Description	
OBS: Outdoor Farm Base Sink Deep	
27” Depth SKU	24” Depth SKU
OBS2402D FARM	OBS2402D-24-FARM
OBS3002D FARM	OBS3002D-24 FARM
OBS3302D FARM	OBS3302D-24 FARM
OBS3602D FARM	OBS3602D-24 FARM
OBS3902D FARM	OBS3902D-24 FARM
OBS4202D FARM	OBS4202D-24 FARM
OBS4802D FARM	OBS4802D-24 FARM

ADA Base Cabinets - Sink Base

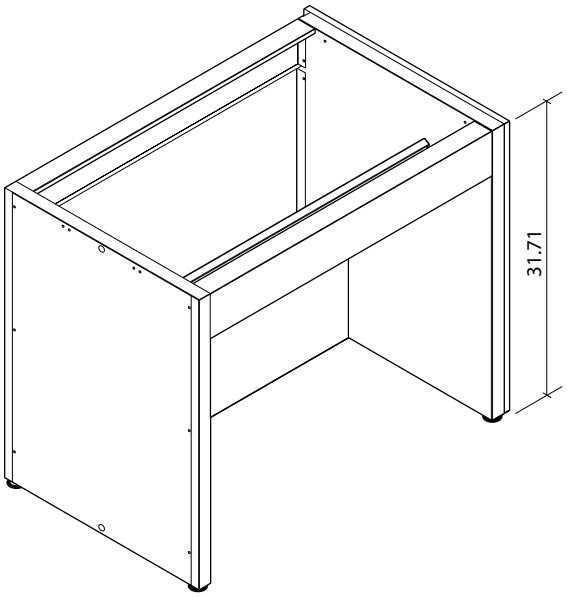

Product Description	
OBS: ADA compliant sink base without doors. Open front sink base for ADA acess. Removeable inner panels.	
27” Depth SKU	24” Depth SKU
OBS3600 ADA	OBS3600-24 ADA
OBS3900 ADA	OBS3900-24 ADA
OBS4200 ADA	OBS4200-24 ADA
OBS4500 ADA	OBS4500-24 ADA
OBS4800 ADA	OBS4800-24 ADA

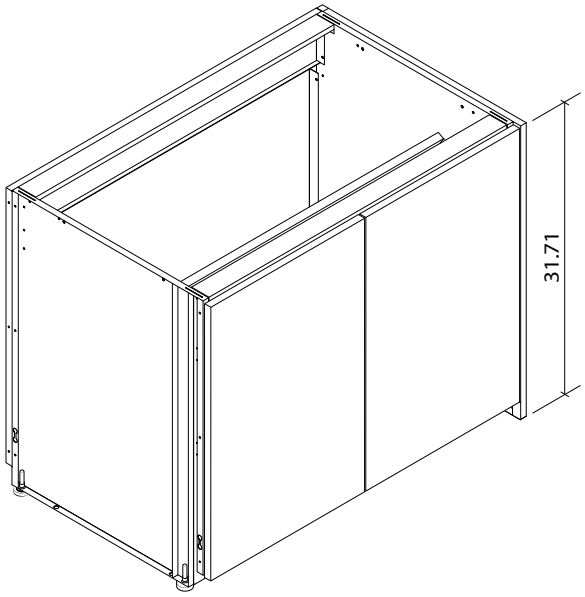

Product Description	
OBS: ADA compliant sink base with doors. Doors are attached to toe kick and swing wide for ADA access.	
27” Depth SKU	24” Depth SKU
OBS3602 ADA	OBS3602-24 ADA
OBS3902 ADA	OBS3902-24 ADA
OBS4202 ADA	OBS4202-24 ADA
OBS4502 ADA	OBS4502-24 ADA
OBS4802 ADA	OBS4802-24 ADA

Base Trash Cabinets

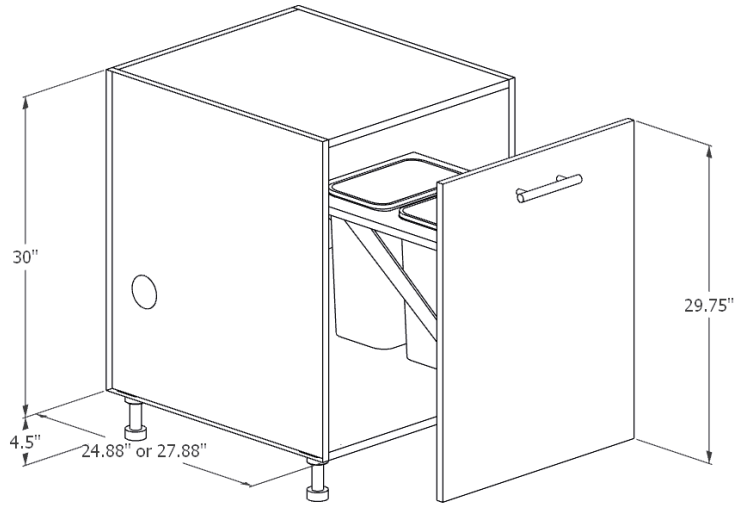

Product Description	
OBT: Outdoor Base Trash Full Height Door NOTE: 15" cabinets have 1 trash bin. Cabinets 18" and above have 2 trash bins.	
27" Depth SKU	24" Depth SKU
OBT1500	OBT1500-24
OBT1800	OBT1800-24
OBT2100	OBT2100-24
OBT2400	OBT2400-24
OBT2700	OBT2700-24

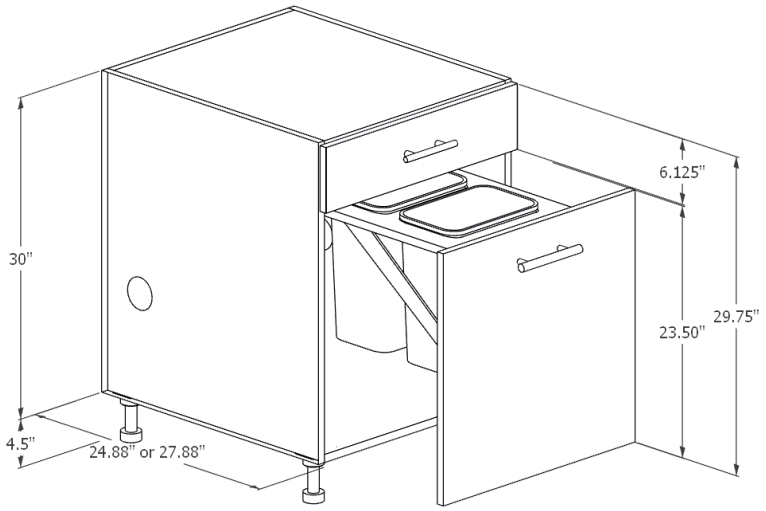

Product Description	
OBT: Outdoor Base Trash Drawer & Door NOTE: 15" cabinets have 1 trash bin. Cabinets 18" and above have 2 trash bins.	
27" Depth SKU	24" Depth SKU
OBT1510	OBT1510-24
OBT1810	OBT1810-24
OBT2110	OBT2110-24
OBT2410	OBT2410-24
OBT2710	OBT2710-24

Product Description	
OBTxx00N: Outdoor Base Trash Nest Top Drawer	
27" Depth SKU	24" Depth SKU
OBT1510N	OBT1510N-24
OBT1810N	OBT1810N-24
OBT2110N	OBT2110N-24
OBT2410N	OBT2410N-24
OBT2710N	OBT2710N-24

Base Trash Cabinets

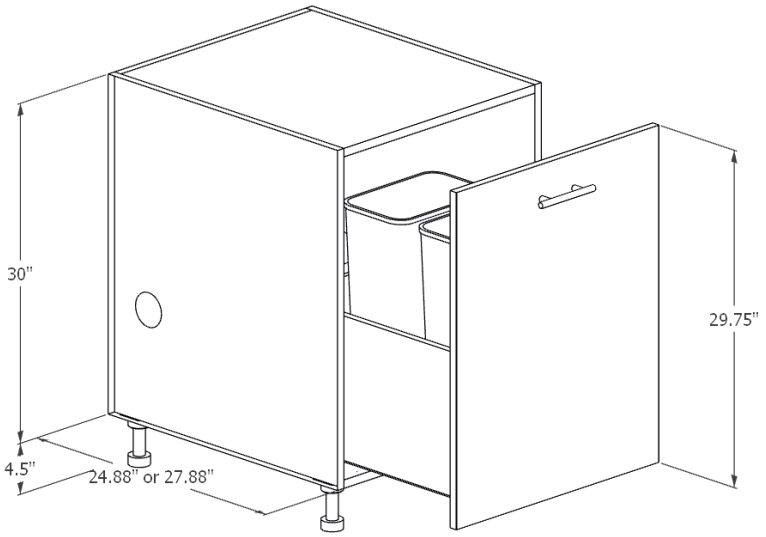

Product Description	
OBTxx00L: Outdoor Base Trash Large 51 quart can	
27” Depth SKU	24” Depth SKU
OBT2100L	OBT2100L-24
OBT2400L	OBT2400L-24
OBT2700	OBT2700L-24

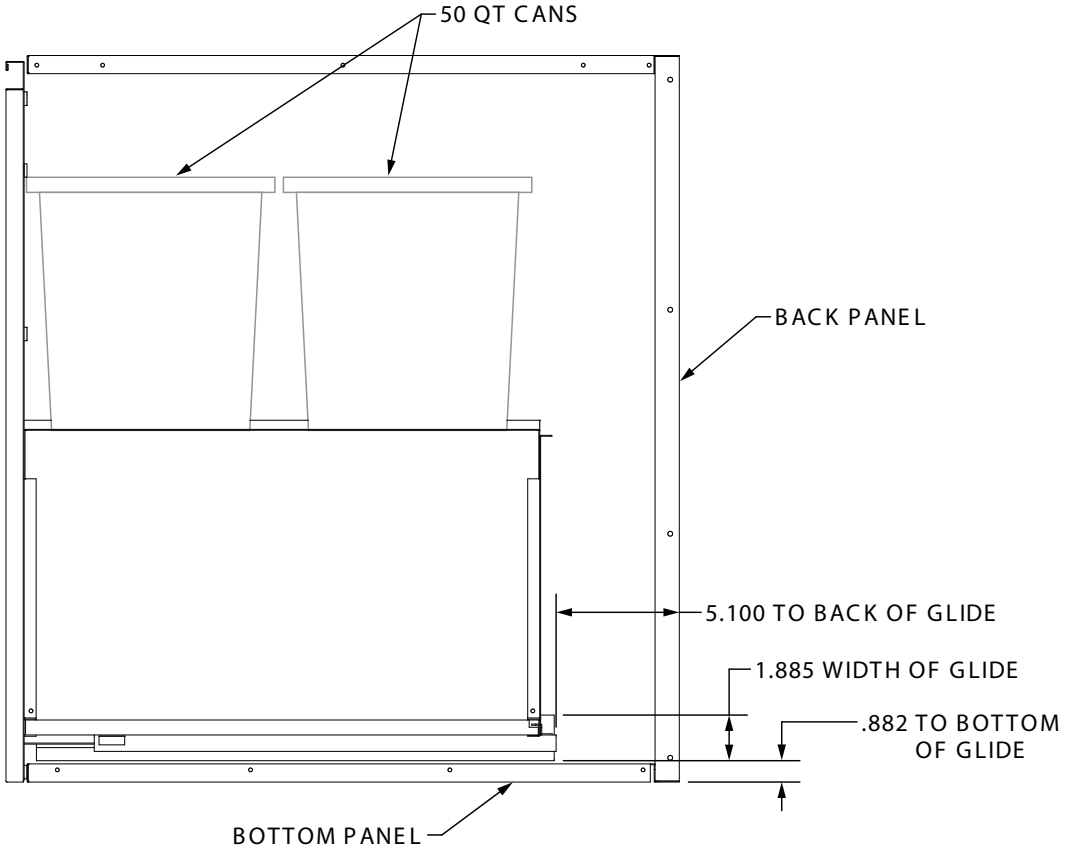

OBT2100L Cross Section Dimensions

Grill Storage Cabinets

- Available in widths from 30" - 64".
- Factory installed trim kits designed to accommodate most grill manufacturers.
- Cabinets available for additional cooking appliances such as cooktops, EVO and a variety of pizza ovens.
- Specify cabinet 6" larger than the grill being used.
- Grill manufacturers such as Wolf, Twin Eagles and Fire Magic, require a deeper cabinet from top to bottom. The nomenclature for such grill is denoted with a, "D" suffix. Example - OGB4802D.

*NOTE: Extra depth cabinets are not available in all sizes. Please contact: Sales@danver.com for specific needs.

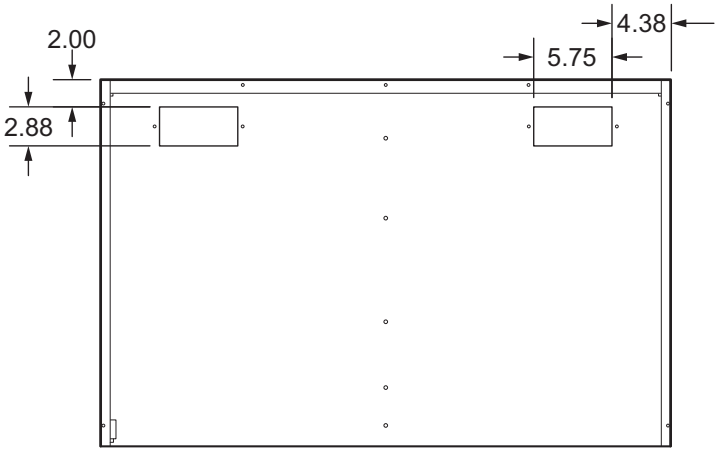

Top View

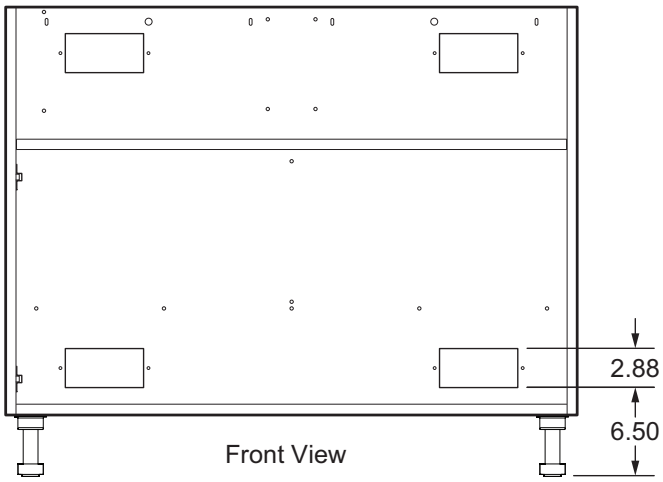

Front View

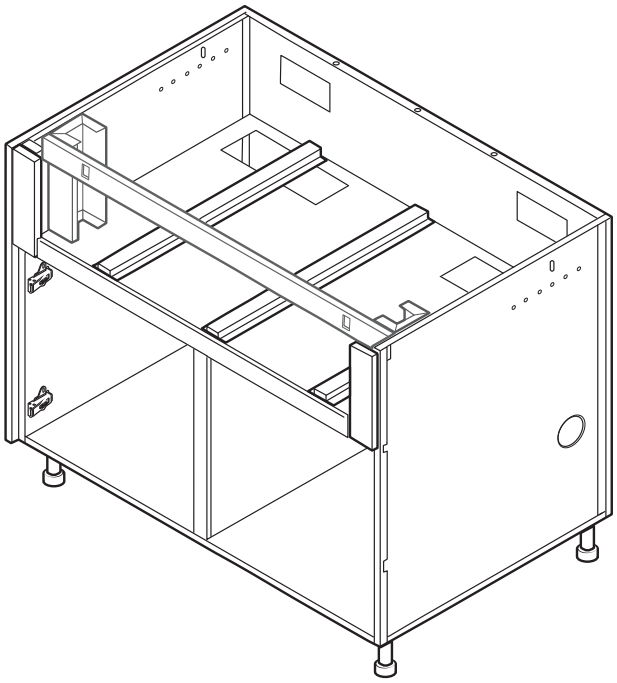

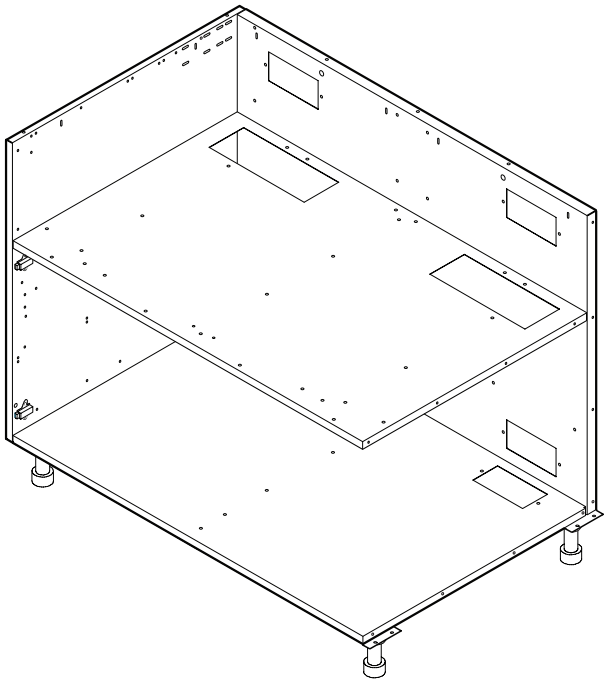

Grill Storage Cabinets

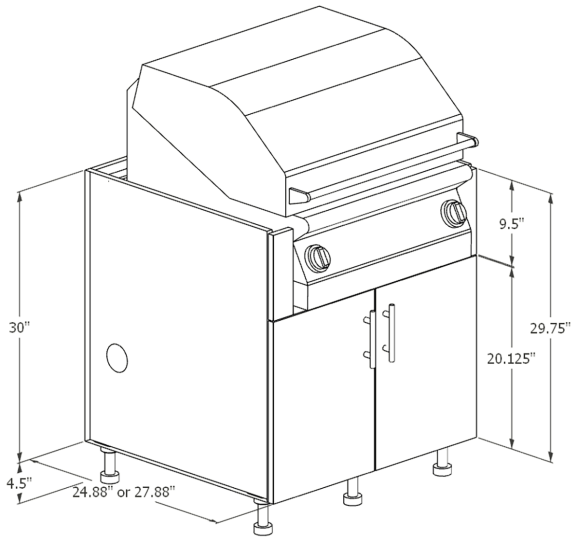

Product Description	
OGB: Outdoor Grill Base 2 Doors. 9.75” high self	
27” Depth SKU	24” Depth SKU
OGB3002	OGB3002-24
OGB3302	OGB3302-24
OGB3602	OGB3602-24
OGB4202	OGB4202-24
OGB4802	OGB4802-24

Product Description	
OGB: Outdoor Grill Base 2 Doors, Deep. 11” high self	
27” Depth SKU	24” Depth SKU
OGB3002D	OGB3002D-24
OGB3302D	OGB3302D-24
OGB3602D	OGB3602D-24
OGB4202D	OGB4202D-24
OGB4802D	OGB4802D-24

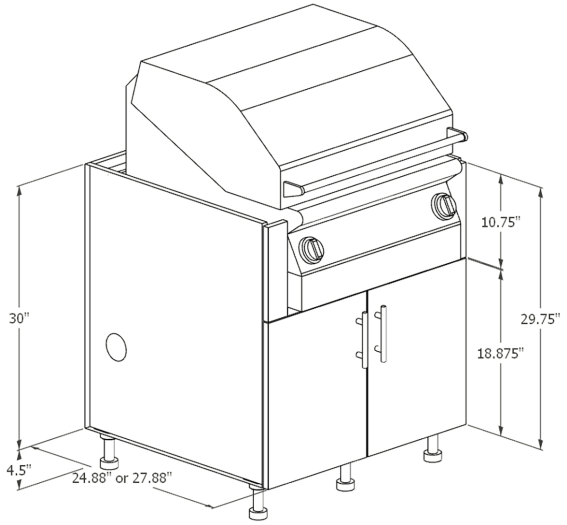

Product Description	
OGB: Outdoor Grill Base 2 Doors. 9.75” high self for EVO only	
27” Depth SKU	24” Depth SKU
OGB3002-EVO	N/A
OGB3602-EVO	N/A
OGB4202-EVO	N/A

Product Description	
OGB: Outdoor Grill Base 2 Doors, Caliber Rockwell	
27” Depth SKU	24” Depth SKU
OGB4202-CALIBER ROCKWELL	N/A
OGB4802-CALIBER ROCKWELL	N/A
OGB4202W-WILMINGTON	N/A

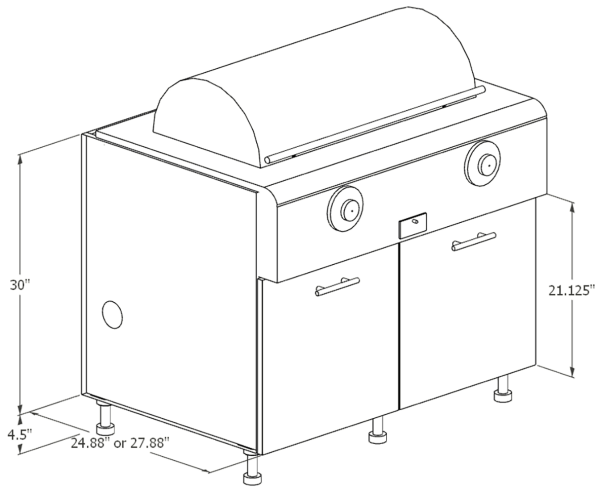

Product Description	
OGBXX02W: Outdoor Grill Base for Willmington 2 Doors. 12.50” high self	
27” Depth SKU	24” Depth SKU
OGB4202W-WILMINGTON	N/A

Grill Storage Cabinets

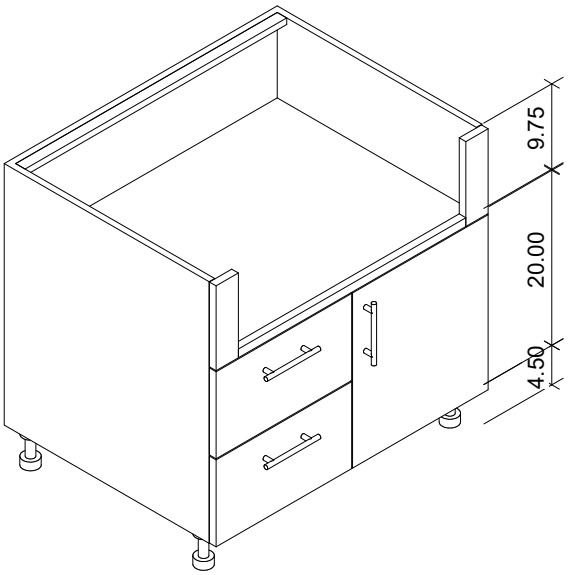

Product Description	
OGB: Outdoor Grill Base 2 Drawers, 1 Door. 9.75” high self	
27” Depth SKU	24” Depth SKU
OGB3021	OGB3021-24
OGB3321	OGB3321-24
OGB3621	OGB3621-24
OGB4221	OGB4221-24
OGB4821	OGB4821-24

Product Description	
OGB: Outdoor Grill Base 2 Drawers, 1 Door, Deep. 11.00” high self	
27” Depth SKU	24” Depth SKU
OGB3021D	OGB3021D-24
OGB3321D	OGB3321D-24
OGB3621D	OGB3621D-24
OGB4221D	OGB4221D-24
OGB4821D	OGB4821D-24

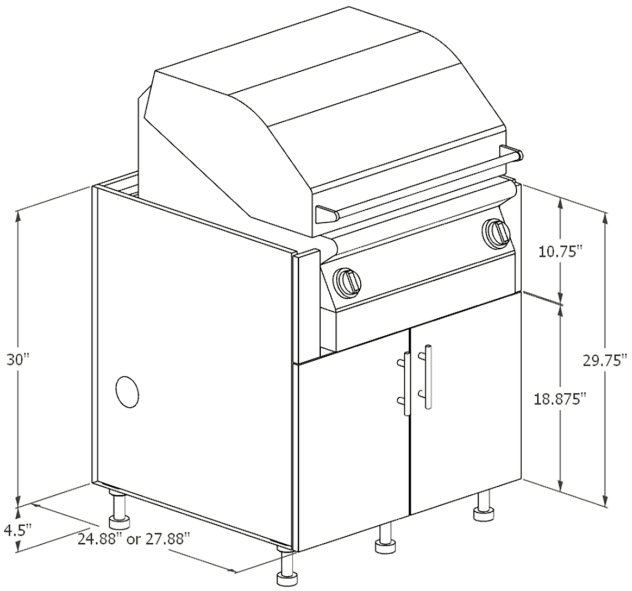

Product Description	
OGB: Outdoor Grill Base 2 Drawers, 1 Door, for EVO cooktops	
27” Depth SKU	24” Depth SKU
OGB3321-EVO	N/A
OGB3621-EVO	N/A
OGB4221-EVO	N/A

Product Description	
OGB: Outdoor Grill Base 2 Drawers, extra deep shelf, for Hasty Bake grills and other extra deep cooking appliances. 18.50”H shelf	
27” Depth SKU	24” Depth SKU
OGB3620-HB	N/A
OGB4220-HB	N/A
OGB4820-HB	N/A

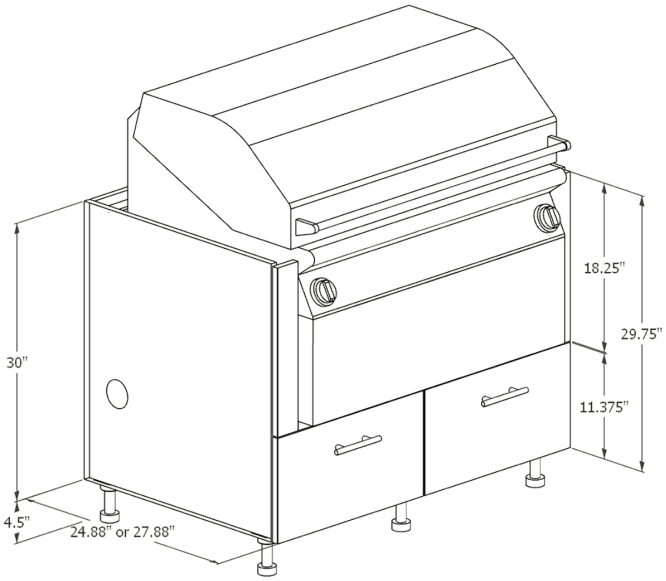

Grill Storage Cabinets

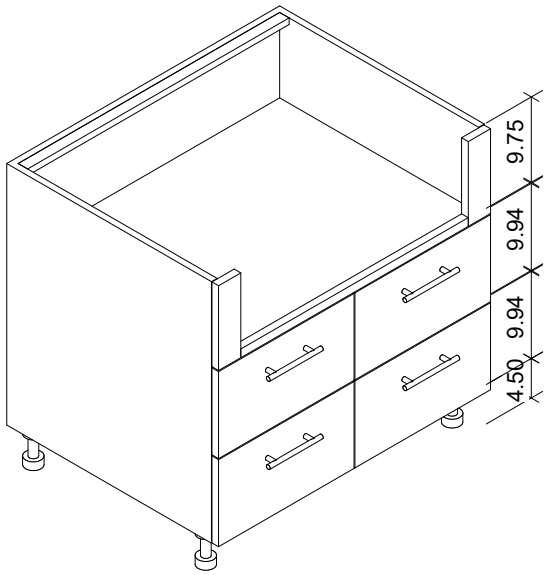

Product Description	
OGB: Outdoor Grill Base 4 Drawers. 9.75” high self	
27” Depth SKU	24” Depth SKU
OGB3640	OGB3640-24
OGB4240	OGB4240-24
OGB4840	OGB4840-24

Product Description	
OGB: Outdoor Grill Base 4 Drawers, Deep. 11.00” high shelf	
27” Depth SKU	24” Depth SKU
OGB3640D	OGB3640D-24
OGB4240D	OGB4240D-24
OGB4840D	OGB4840D-24

Product Description	
OGB: Outdoor Grill Base 4 Drawers, for EVO cooktops only. 9.75” high shelf	
27” Depth SKU	24” Depth SKU
OGB4240-EVO	N/A

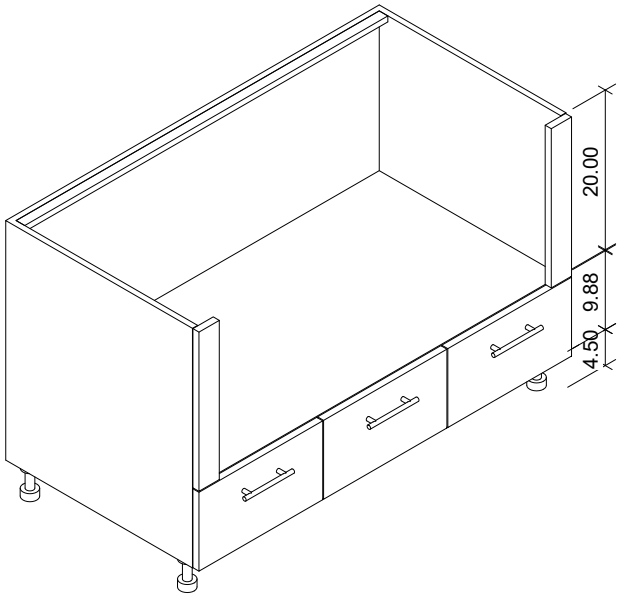

Product Description	
OGB: Outdoor Grill Base 3 Drawers, for Hasty Bake grills and other extra deep cooking appliances. 18.50” high shelf	
27” Depth SKU	24” Depth SKU
OGB5430-HB	N/A
OGB5830-HB	N/A

Grill Storage Cabinets

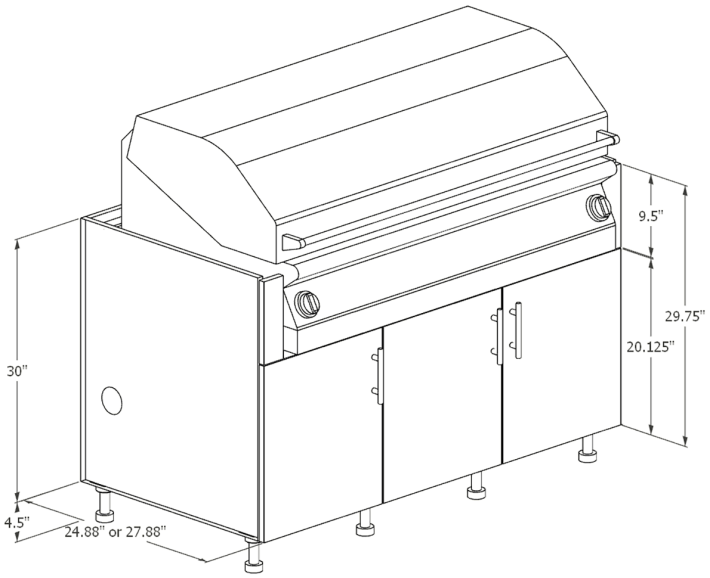

Product Description	
OGB: Outdoor Grill Base 3 Doors. 9.75” high shelf	
27” Depth SKU	24” Depth SKU
OGB5403	N/A
OGB5803	N/A
OGB6203	N/A

Product Description	
OGB: Outdoor Grill Base 3 Doors, Deep. 11.00” high shelf	
27” Depth SKU	24” Depth SKU
OGB5403D	N/A
OGB5803D	N/A
OGB6203D	N/A

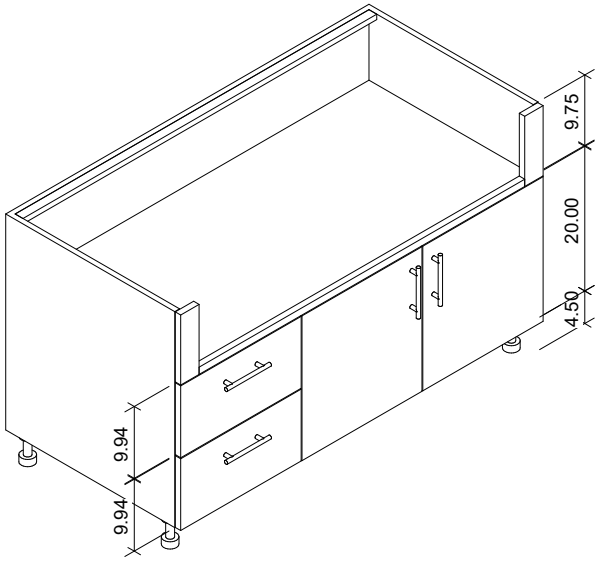

Product Description	
OGB: Outdoor Grill Base 2 Drawers, 2 Doors. 9.75” high shelf	
27” Depth SKU	24” Depth SKU
OGB5422	N/A
OGB5822	N/A
OGB6222	N/A

Product Description	
OGB: Outdoor Grill Base 2 Doors, Deep. 11.00” high shelf	
27” Depth SKU	24” Depth SKU
OGB5422D	N/A
OGB5822D	N/A
OGB6222D	N/A

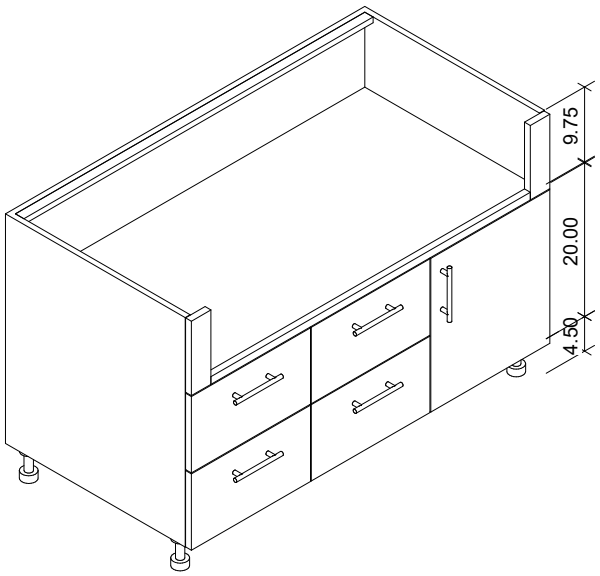

Product Description	
OGB: Outdoor Grill Base 4 Drawers, 1 Door. 9.75” high shelf	
27” Depth SKU	24” Depth SKU
OGB5441	N/A
OGB5841	N/A
OGB6241	N/A

Product Description	
OGB: Outdoor Grill Base 4 Drawers, 1 Door, Deep. 11.00” high shelf	
27” Depth SKU	24” Depth SKU
OGB5441D	N/A
OGB5841D	N/A
OGB6241D	N/A

Grill Storage Cabinets

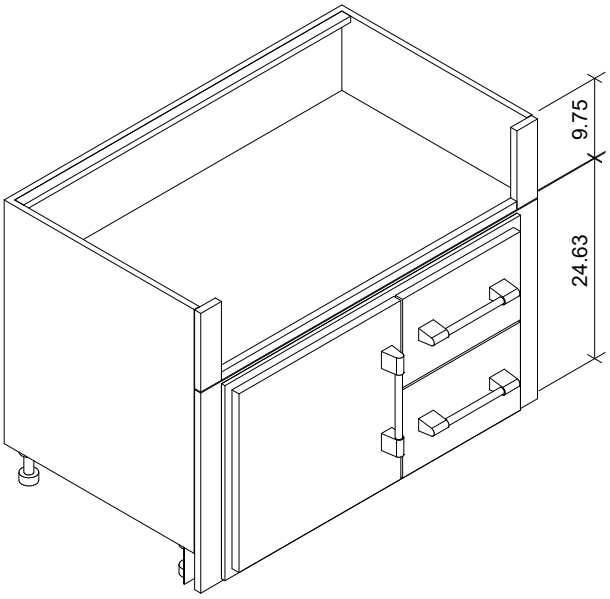

Product Description	
OGF: Outdoor Grill Base for grill and refrigerator insert (specify).	
27” Depth SKU	24” Depth SKU
OGF3600	OGF3600-24
OGF4200	OGF4200-24
OGF4800	OGF4800-24
OGF5400	
OGF6200	

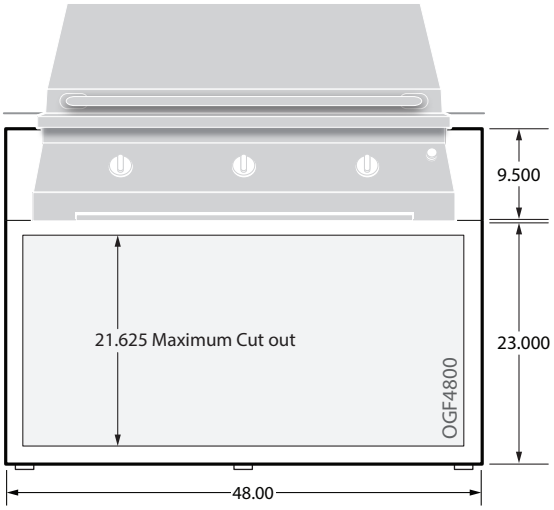

NOTE: OGF bases have a larger cabinet box than standard cabinets.

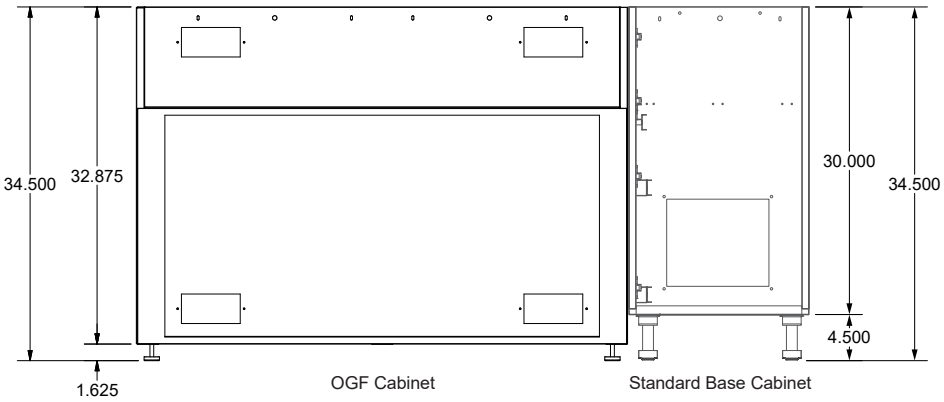

Grill Storage Cabinets - Warming Drawer Insert

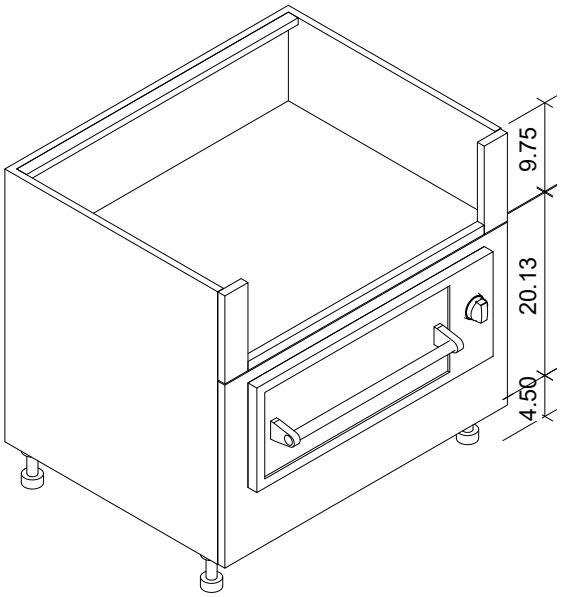

Product Description	
OGW: Outdoor Grill Base w/ Warming Drawer Warming Drawer Only. 9.75” high shelf	
27” Depth SKU	24” Depth SKU
OGW3600	N/A
OGW4200	N/A
OGW4800	N/A

Product Description	
OGW: Outdoor Grill Base w/ Warming Drawer Deep, Warming Drawer Only. 11.00” high shelf	
27” Depth SKU	24” Depth SKU
OGW3600D	N/A
OGW4200D	N/A
OGW4800D	N/A

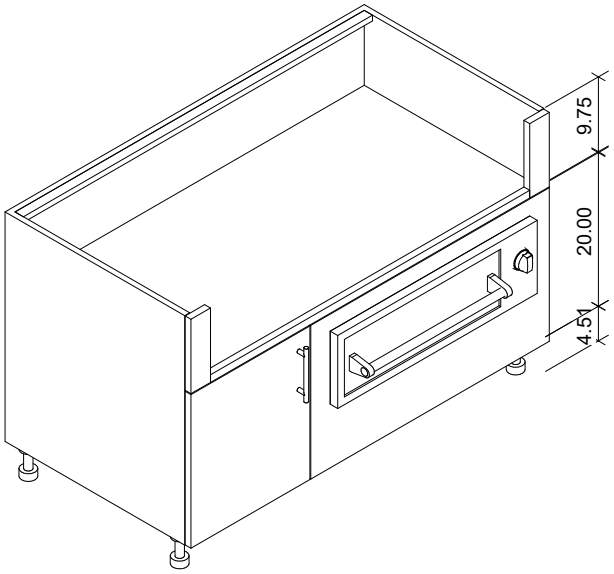

Product Description	
OGW: Outdoor Grill Base w/ Warming Drawer Warming Drawer, 1 Door. 9.75” high shelf	
27” Depth SKU	24” Depth SKU
OGW5401	N/A
OGW5801	N/A

Product Description	
OGW: Outdoor Grill Base w/ Warming Drawer Deep, Warming Drawer, 1 Door. 11.00” high shelf	
27” Depth SKU	24” Depth SKU
OGW5401D	N/A
OGW5801D	N/A

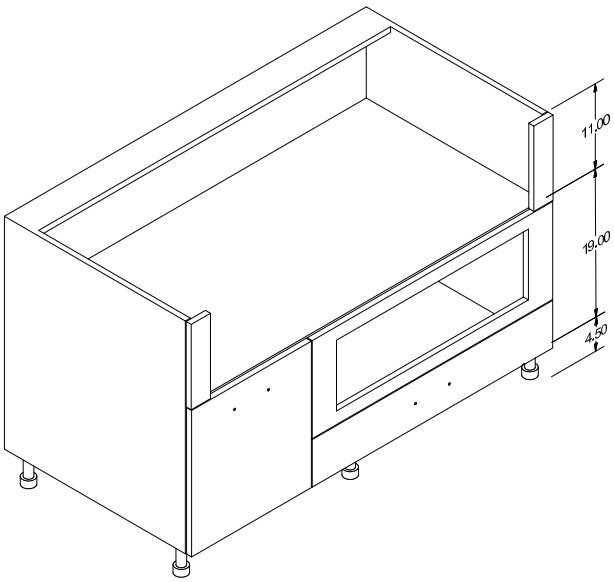

Product Description	
OGW: Outdoor Grill Base w/ Warming Drawer Warming Drawer, 1 Drawer, 1 Door. 9.75” high shelf	
27” Depth SKU	24” Depth SKU
OGW5411	N/A

Product Description	
OGW: Outdoor Grill Base w/ Warming Drawer Deep, Warming Drawer, 1 Drawer, 1 Door. 11.00” high shelf	
27” Depth SKU	24” Depth SKU
OGW5411D	N/A

Grill Storage Cabinets - Warming Drawer Insert

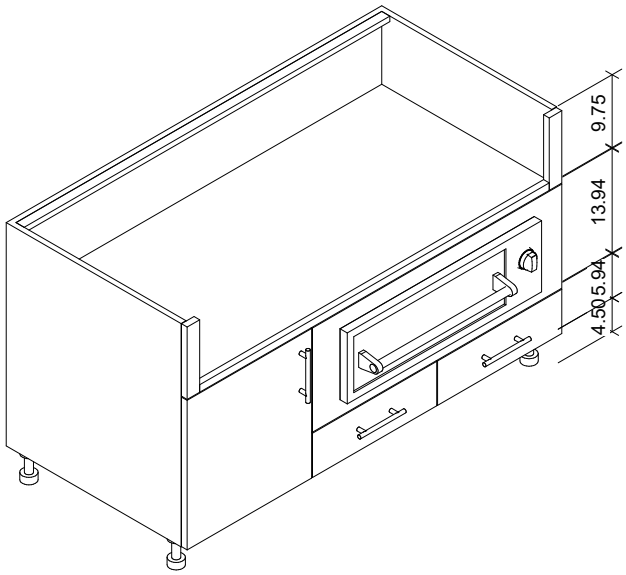

Product Description	
OGW: Outdoor Grill Base w/ Warming Drawer Warming Drawer, 2 Drawers, 1 Door. 9.75” high shelf	
27” Depth SKU	24” Depth SKU
OGW5821	N/A
OGW6221	N/A

Product Description	
OGW: Outdoor Grill Base w/ Warming Drawer Deep, Warming Drawer, 2 Drawers, 1 Door. 11.00” high shelf	
27” Depth SKU	24” Depth SKU
OGW5821D	N/A
OGW6221D	N/A

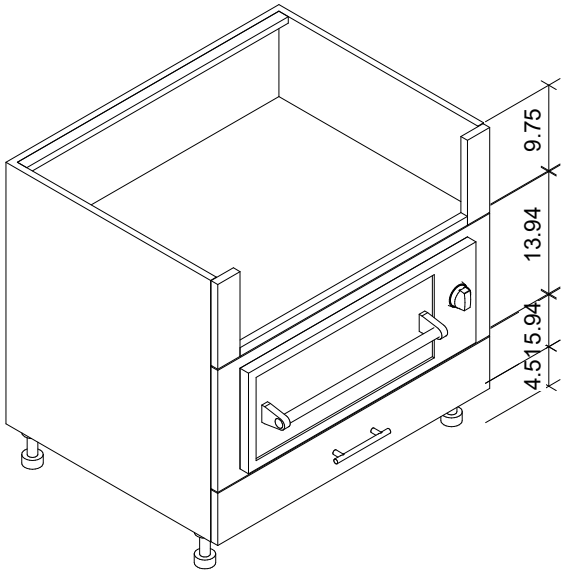

Product Description	
OGW: Outdoor Grill Base w/ Warming Drawer Warming Drawer, 1 Drawer. 9.75” high shelf	
27” Depth SKU	24” Depth SKU
OGW3310	N/A
OGW3610	N/A

Product Description	
OGW: Outdoor Grill Base w/ Warming Drawer Deep, Warming Drawer, 1 Drawer. 11.00” high shelf	
27” Depth SKU	24” Depth SKU
OGW3310D	N/A
OGW3610D	N/A

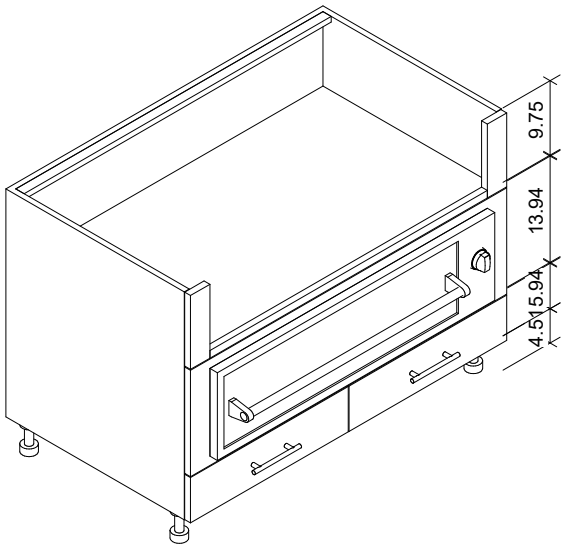

Product Description	
OGW: Outdoor Grill Base w/ Warming Drawer Warming Drawer, 2 Drawers. 9.75” high shelf	
27” Depth SKU	24” Depth SKU
OGW4220	N/A
OGW4820	N/A
OGW5420	N/A

Product Description	
OGW: Outdoor Grill Base w/ Warming Drawer Deep, Warming Drawer, 2 Drawers. 11.00” high shelf	
27” Depth SKU	24” Depth SKU
OGW4220D	N/A
OGW4820D	N/A
OGW5420D	N/A

Grill Storage Cabinets - Warming Drawer Insert

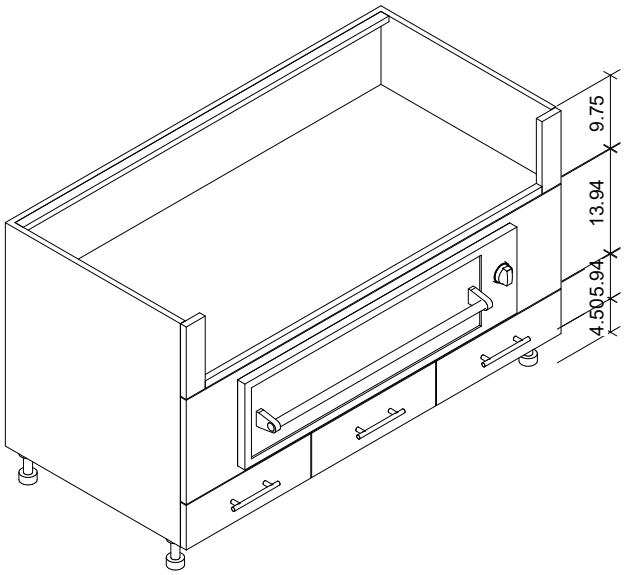

Product Description	
OGW: Outdoor Grill Base w/ Warming Drawer Warming Drawer, 3 Drawers. 9.75” high shelf	
27” Depth SKU	24” Depth SKU
OGW5830	N/A

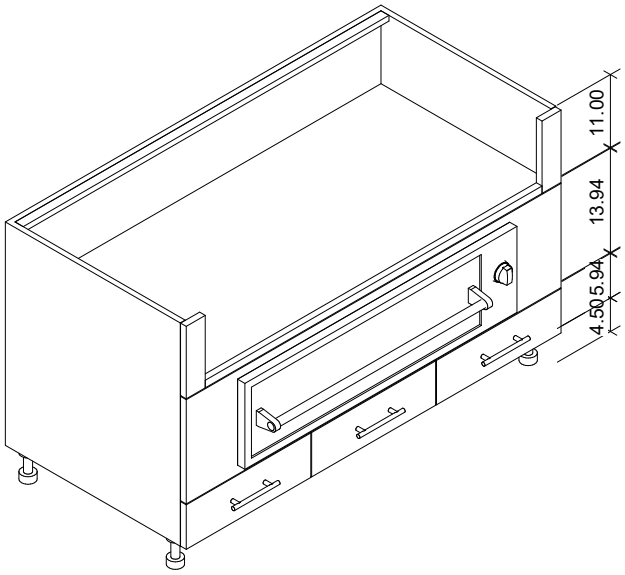

Product Description	
OGW: Outdoor Grill Base w/ Warming Drawer Deep, Warming Drawer, 3 Drawers. 11.00” high shelf	
27” Depth SKU	24” Depth SKU
OGW5830D	N/A

Appliance Base Cabinets

- Sideburner bases available in widths from 12″ to 48″.
- Bartending Center Bases (OBC) available in widths from 24″ to 48″.
- Recommended to specify cabinet 6″ wider than the appliance being used.
- Factory installed trim kits designed for each appliance tucks-in behind the control panel of the appliance to ensure a proper fit.
- OBB & OBC appliance cabinetry accommodate all electrical, plumbing and gas necessities.

*NOTE: Extra depth cabinets are not available in all sizes. Please contact: Sales@danver.com for specific needs.

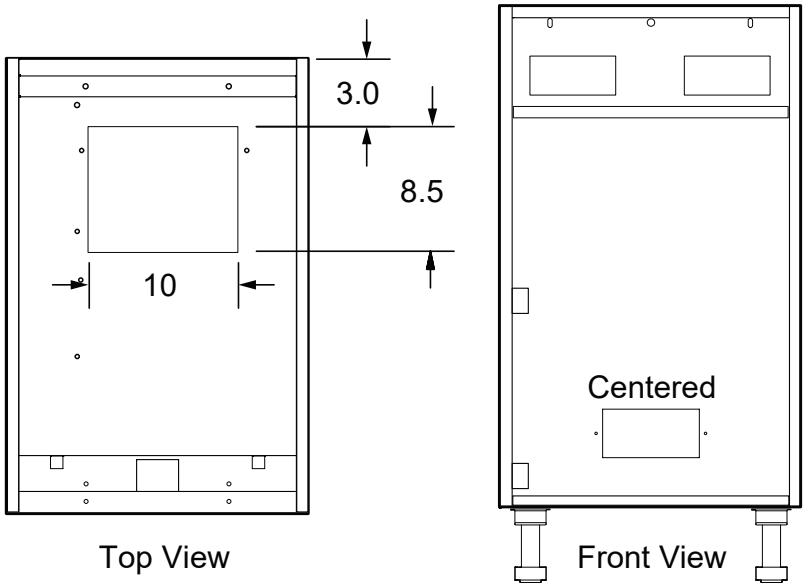

There are two cabinet styles - one placing the burner at countertop level and the recessed cabinet (LOW) placing the burner 7″ below the countertop.

The more popular recessed cabinet offers more convenience for stock pot cooking.

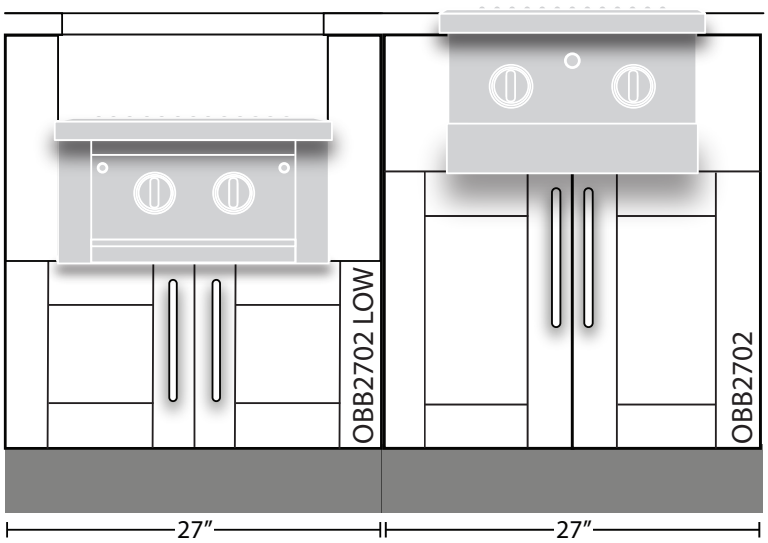

Appliance Base Cabinets - Side Burner Base

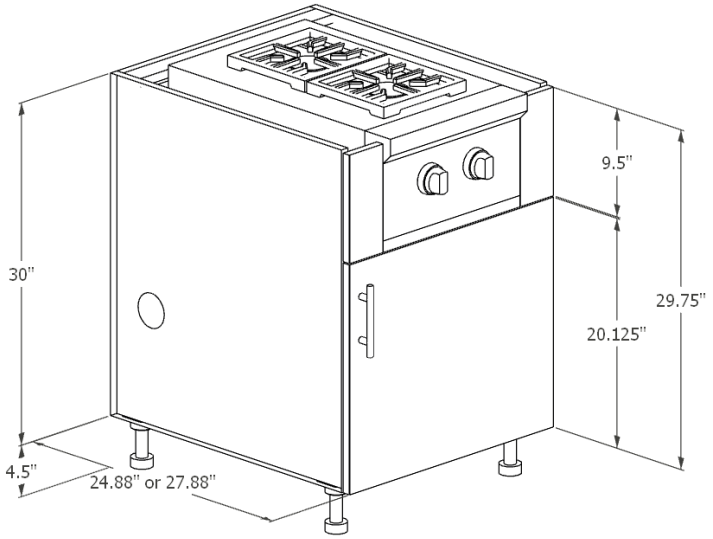

Product Description	
OBB: Outdoor Appliance Base 1 Door. 9.75” high shelf	
27” Depth SKU	24” Depth SKU
OBB1201-LH	OBB1201-24-LH
OBB1201-RH	OBB1201-24-RH
OBB1501-LH	OBB1501-24-LH
OBB1501-RH	OBB1501-24-RH
OBB1801-LH	OBB1801-24-LH
OBB1801-RH	OBB1801-24-RH
OBB2101-LH	OBB2101-24-LH
OBB2101-RH	OBB2101-24-RH
OBB2401-LH	OBB2401-24-LH
OBB2401-RH	OBB2401-24-RH

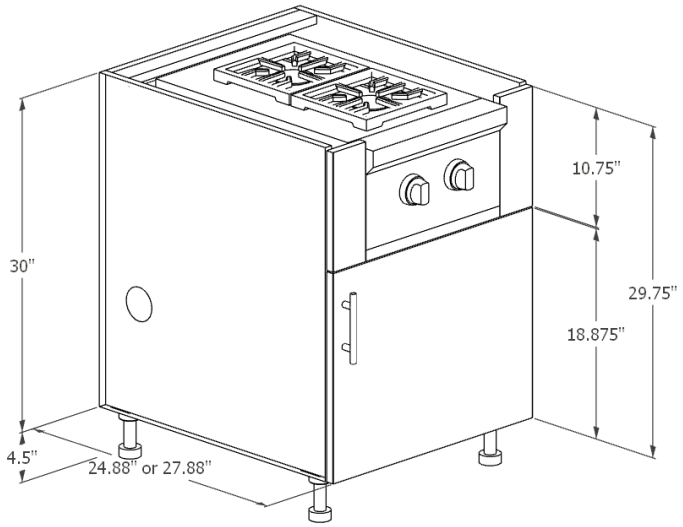

Product Description	
OBB: Outdoor Appliance Base 1 Door, Deep. 11.00” high shelf	
27” Depth SKU	24” Depth SKU
OBB1201D-LH	OBB1201D-24-LH
OBB1201D-RH	OBB1201D-24-RH
OBB1501D-LH	OBB1501D-24-LH
OBB1501D-RH	OBB1501D-24-RH
OBB1801D-LH	OBB1801D-24-LH
OBB1801D-RH	OBB1801D-24-RH
OBB2401D-LH	OBB2401D-24-LH
OBB2401D-RH	OBB2401D-24-RH

Appliance Base Cabinets - Side Burner Base

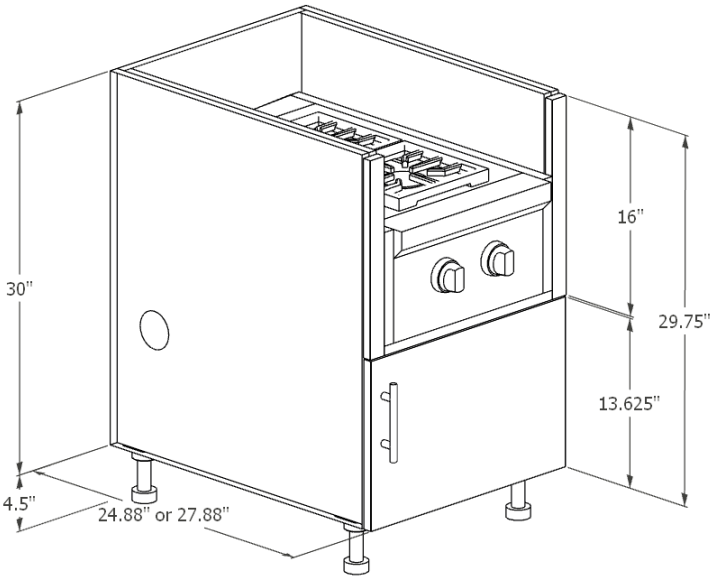

Product Description	
OBB: Outdoor Appliance Base Low, 1 Door. 15.50” high shelf	
27” Depth SKU	24” Depth SKU
OBB1801-LH LOW	OBB1801-24 LOW
OBB1801-RH LOW	OBB1801-24 LOW
OBB2101-LH LOW	OBB2101-24-LH LOW
OBB2101-RH LOW	OBB2101-24-RH LOW

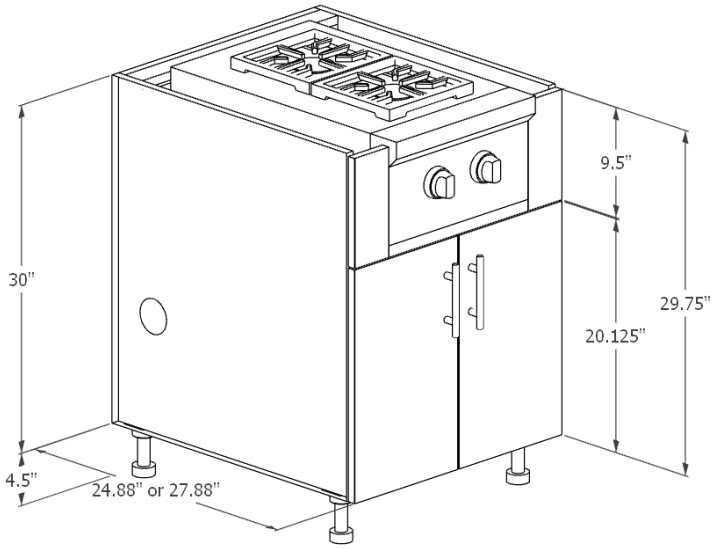

Product Description	
OBB: Outdoor Appliance Base 2 Doors. 9.75” high shelf	
27” Depth SKU	24” Depth SKU
OBB2402	OBB2402-24
OBB2702	OBB2702-24
OBB3002	OBB3002-24

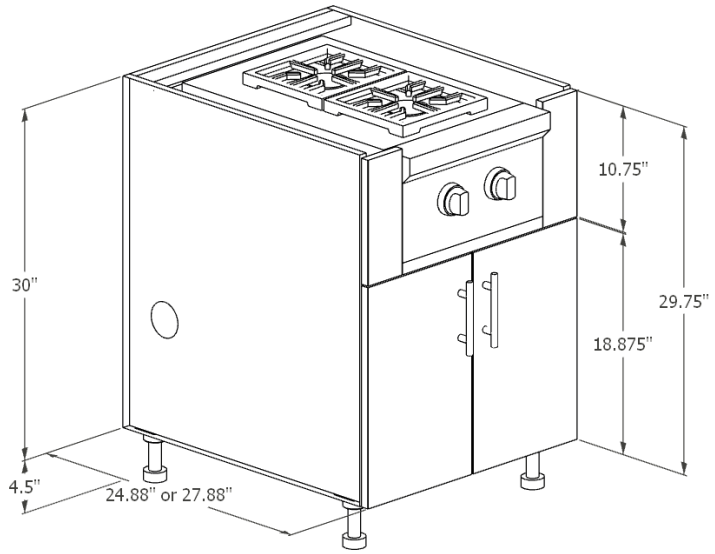

Product Description	
OBB: Outdoor Appliance Base Deep, 2 Door. 11.00” high shelf	
27” Depth SKU	24” Depth SKU
OBB2402D	OBB2402D-24
OBB2702D	OBB2402D-24

Appliance Base Cabinets - Side Burner Base

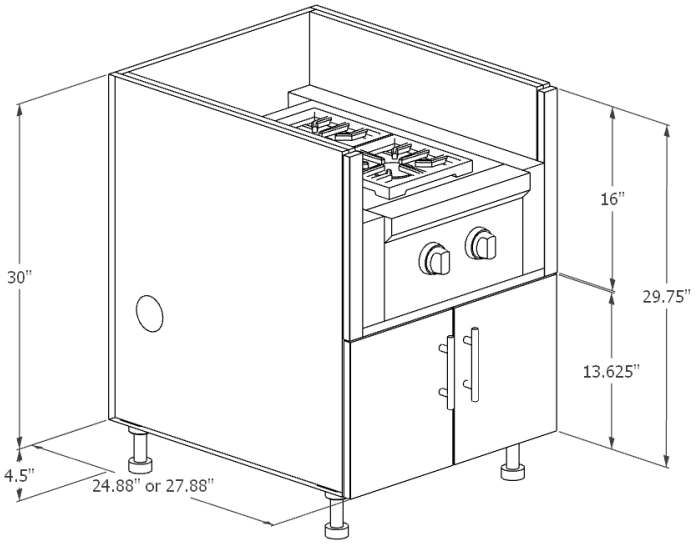

Product Description	
OBB: Outdoor Appliance Base Low, 2 Doors. 15.50” high shelf	
27” Depth SKU	24” Depth SKU
OBB2402 LOW	OBB2402-24-LOW
OBB2702 LOW	OBB2702-24-LOW
OBB3002 LOW	OBB3002-24 LOW

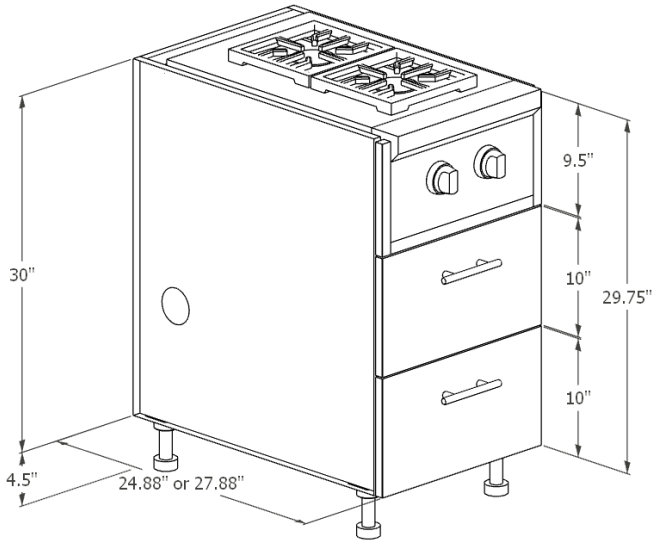

Product Description	
OBB: Outdoor Appliance Base 2 Drawers. 9.75” high shelf	
27” Depth SKU	24” Depth SKU
OBB1820	OBB1820-24
OBB2120	OBB2120-24
OBB2420	OBB2420-24
OBB2720	OBB2720-24
OBB3020	OBB3020-24

Product Description	
OBB: Outdoor Appliance Base Deep, 2 Drawers.11.00” high shelf	
27” Depth SKU	24” Depth SKU
OBB1820D	OBB1820D-24
OBB2120D	OBB2120D-24
OBB2420D	OBB2420D-24
OBB2720D	OBB2720D-24
OBB3020D	OBB3020D-24

Appliance Base Cabinets - Bartender/Cocktail Base

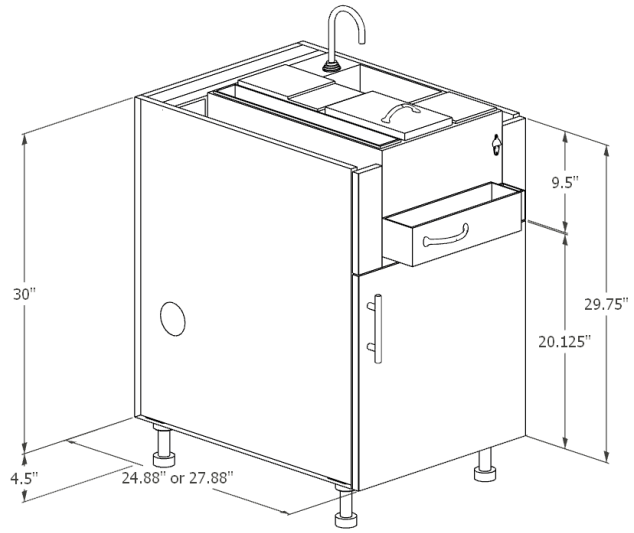

Product Description	
OBC: Outdoor Bartender/Cocktail station base 1 Door. 9.75” high shelf	
27” Depth SKU	24” Depth SKU
OBC1501-LH	OBC1501-LH-24
OBC1501-RH	OBC1501-RH-24
OBC1801-LH	OBC1801-24-LH
OBC1801-RH	OBC1801-24-RH
OBC2101-LH	OBC2101-24-LH
OBC2101-RH	OBC2101-24-RH
OBC2401-LH	OBC2401-LH-24
OBC2401-RH	OBC2401-RH-24

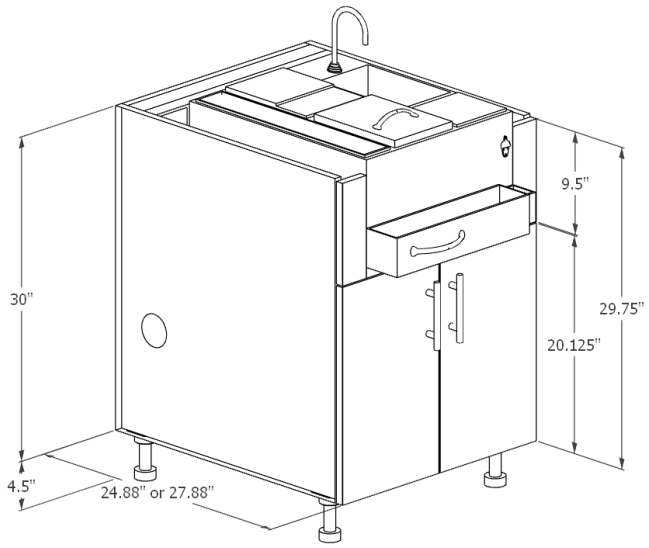

Product Description	
OBC: Outdoor Bartender/Cocktail station base, 2 Doors. 9.75” high shelf	
27” Depth SKU	24” Depth SKU
OBC2402	OBC2402-24
OBC2702	OBC2702-24
OBC3002	OBC3002-24
OBC3302	OBC3302-24
OBC3602	OBC3602-24
OBC3902	OBC3902-24

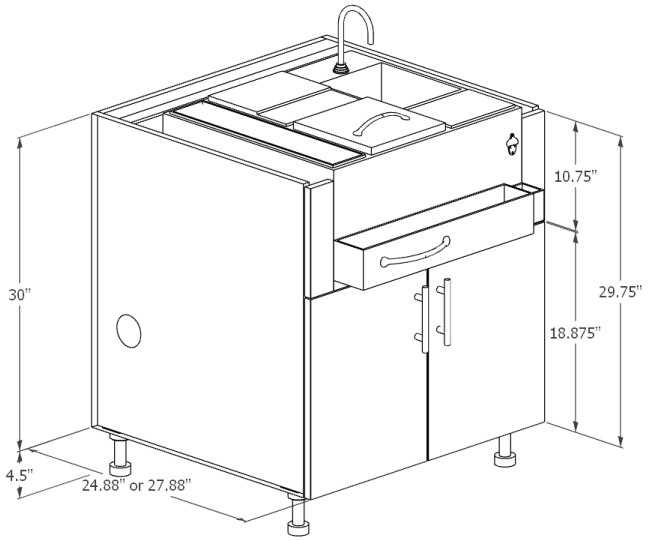

Product Description	
OBC: Outdoor Bartender/Cocktail station base, Deep, 1 Door. 11.00” high shelf	
27” Depth SKU	24” Depth SKU
OBC1501D-LH	OBC1501D-LH-24
OBC1501D-RH	OBC1501D-RH-24
OBC1801D-LH	OBC1801D-RH-24
OBC1801D-RH	OBC1801D-LH-24
OBC2101D-LH	OBC2101D-LH-24
OBC2101D-RH	OBC2101D-RH-24
OBC2401D-LH	OBC2401D-LH-24
OBC2401D-RH	OBC2401D-RH-24

Product Description	
OBC: Outdoor Bartender/Cocktail station base, Deep, 2 Door. 11.00” high shelf	
27” Depth SKU	24” Depth SKU
OBC2402D	OBC2402D-24
OBC2702D	OBC2702D-24
OBC3002D	OBC3002D-24
OBC3302D	OBC3302D-24
OBC3602D	OBC3602D-24
OBC3902D	OBC3902D-24

Appliance Base Cabinets - Egg Base/Diagonal Corner Base

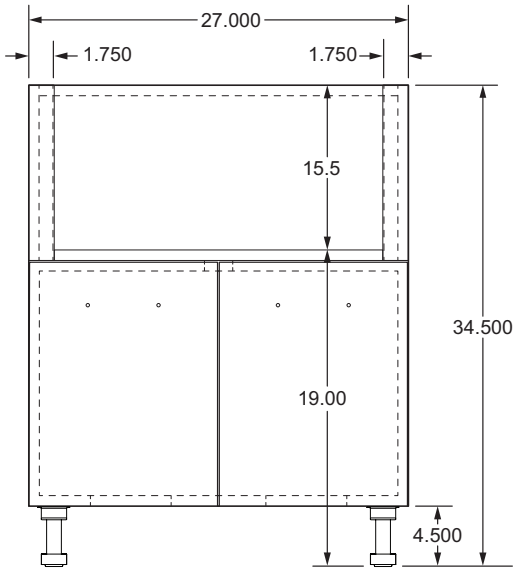

Product Description	
OEB: Outdoor Egg Smoker Base, 2 Doors. 15.50” high shelf	
27” Depth SKU	24” Depth SKU
OEB2702 H18	OEB2702-24 H18
OEB3302 H18	OEB3302-24 H18

Note: OEB Cabinets have additional support for the weight of the smoker grill eggs (over 200lbs.).

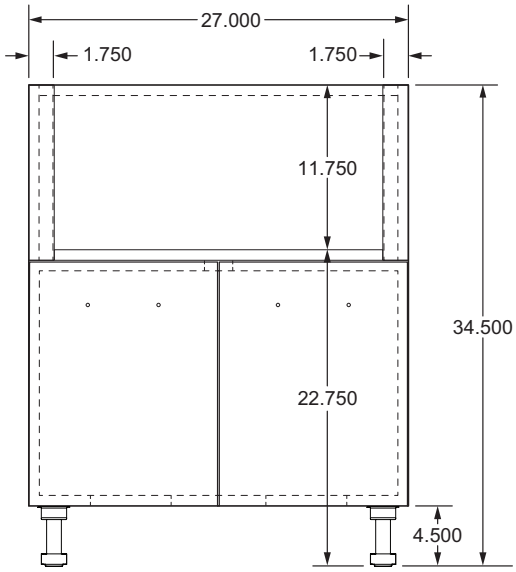

Product Description	
OEB: Outdoor Egg Smoker Base, 2 Doors. 11.75” high shelf	
27” Depth SKU	24” Depth SKU
OEB2702 H22	OEB2702-24 H22
OEB3302 H22	OEB3302-24 H22

Note: OEB Cabinets have additional support for the weight of the smoker grill eggs (over 200lbs.).

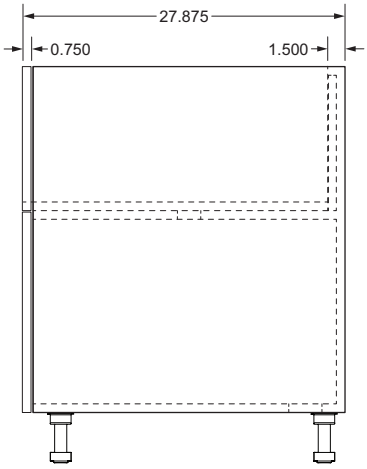

EXAMPLE:
OEB 2702 and 3302 side elevation measurements.

Appliance Base Cabinets - Egg Base/Diagonal Corner Base

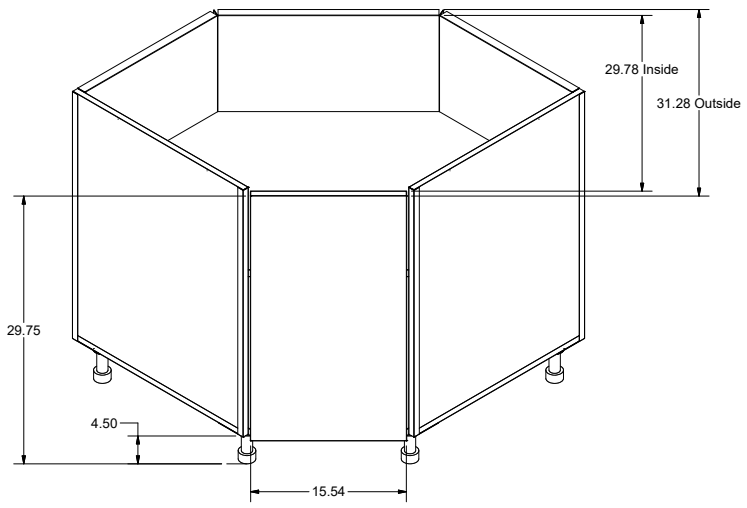

DCB36

Product Description	
DCB: Diagonal Corner Base 1 Door	
27” Depth SKU	24” Depth SKU
DCB39-LH	N/A
DCB39-RH	N/A
N/A	DCB36-LH
N/A	DCB36-RH

Product Description	
DCB H18: Diagonal Corner Egg Smoker Base, 1 Door. 15.50” high shelf	
27” Depth SKU	24” Depth SKU
DCB39 H18-LH	DCB36 H18-LH
DCB39 H18-RH	DCB36 H18-RH

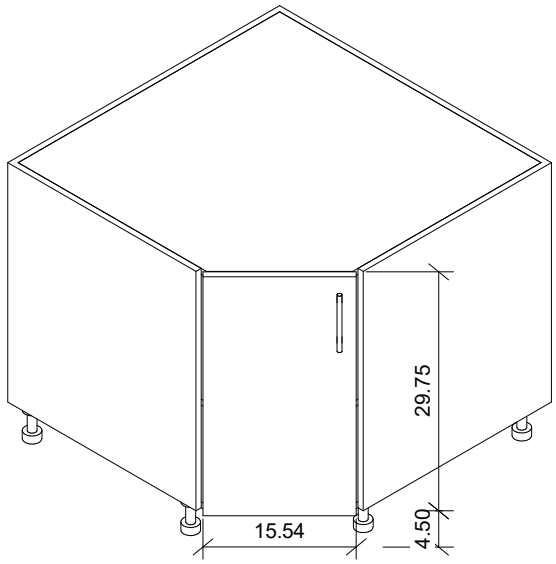

Product Description	
DCB H22: Diagonal Corner Egg Smoker Base, 1 Door. 11.75: high shelf	
27” Depth SKU	24” Depth SKU
DCB39 H22-LH	DCB36 H22-LH
DCB39 H22-RH	DCB36 H22-RH

Appliance Base Cabinets - Warming Drawer Base

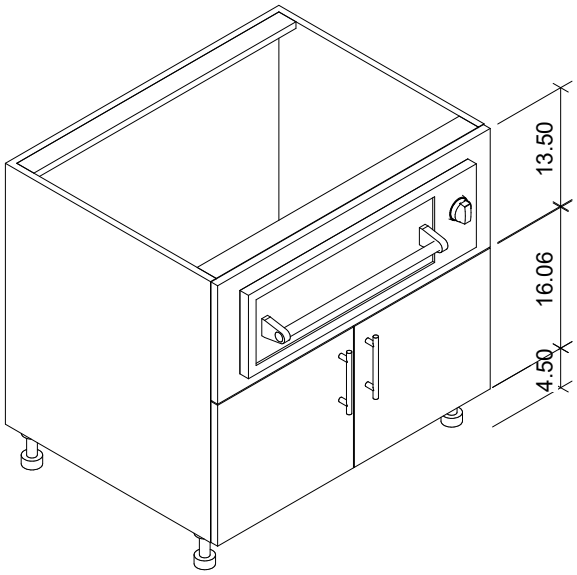

Product Description	
OBW: Outdoor Warming Drawer base 2 Doors	
27” Depth SKU	24” Depth SKU
OBW3002	OBW3002-24
OBW3302	OBW3302-24
OBW3602	OBW3602-24

Product Description	
OBW: Outdoor Warming Drawer base Deep, 2 Doors	
27” Depth SKU	24” Depth SKU
OBW3002D	OBW3002D-24
OBW3302D	OBW3302D-24
OBW3602D	OBW3602D-24

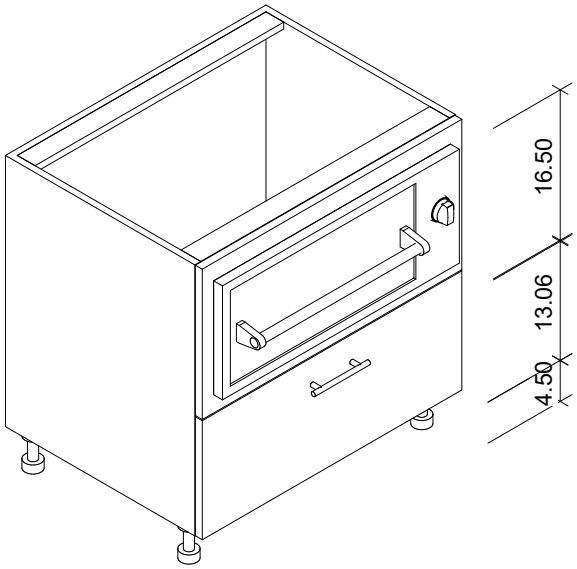

Product Description	
OBW: Outdoor Warming Drawer base 1 Drawer	
27” Depth SKU	24” Depth SKU
OBW3010	OBW3010-24
OBW3310	OBW3310-24
OBW3610	OBW3610-24

Product Description	
OBW: Outdoor Warming Drawer base Deep, 1 Drawer	
27” Depth SKU	24” Depth SKU
OBW3010D	OBW3010D-24
OBW3310D	OBW3310D-24
OBW3610D	OBW3610D-24

Note: The OBW3002 is made for 27″ wide warming drawers. The OBW33xx’s accommodate 30″ wide drawers. The OBW36xx’s accommodate 33″ wide drawers.

Appliance Base Cabinets - Viking Grill and Side Burner Base

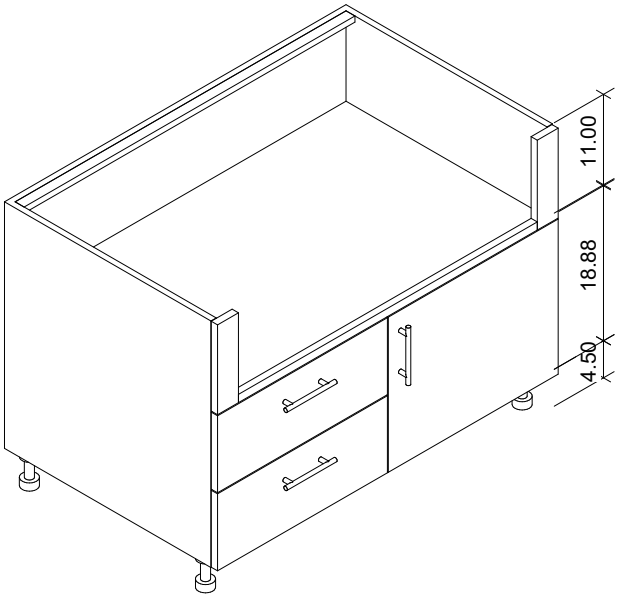

Product Description
VGB: Outdoor Viking Grill base 2 Drawers, 1 Door. 11.00” high shelf
29.88” Depth SKU
VGB3321
VGB3621
VGB4821

Product Description
VGB: Outdoor Viking Grill base 2 Doors. 11.00” high shelf
29.88” Depth SKU
VGB3602
VGB4802

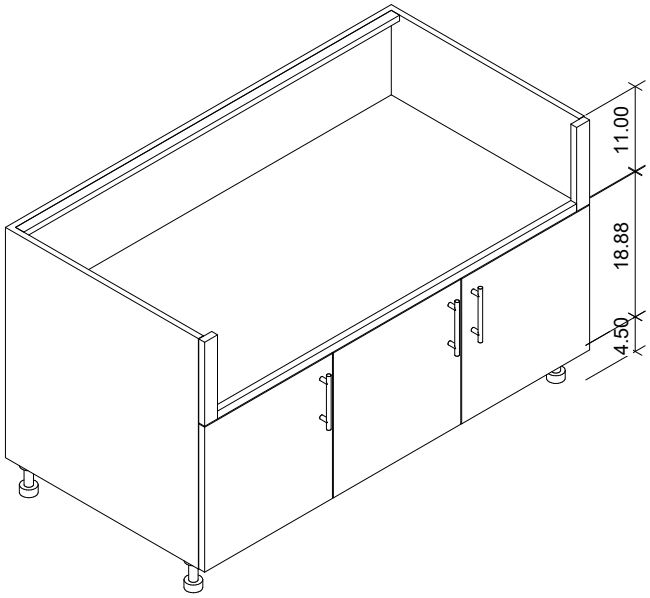

Product Description
VGB: Outdoor Viking Grill base 2 Doors, 2 drawers. 11.00” high shelf
29.88” Depth SKU
VGB5822

Product Description
VGB: Outdoor Viking Grill base 3 Doors. 11.00” shelf
29.88” Depth SKU
VGB5803

Product Description
VGB: Outdoor Viking Grill base 4 Drawers. 11.00” high shelf
29.88” Depth SKU
VGB3640
VGB4840

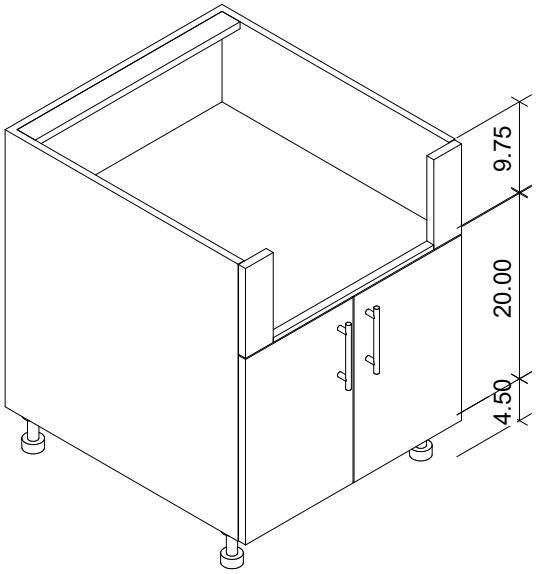

Product Description
VBB: Outdoor Viking Grill base 1 Door
29.88” Depth SKU
VBB1801-LH
VBB1801-RH
VBB2101-LH
VBB2101-RH

Product Description
VBB: Outdoor Viking Grill base 2 Doors
29.88” Depth SKU
VBB2702
VBB3002

Specialty Base Cabinets - Corner Base

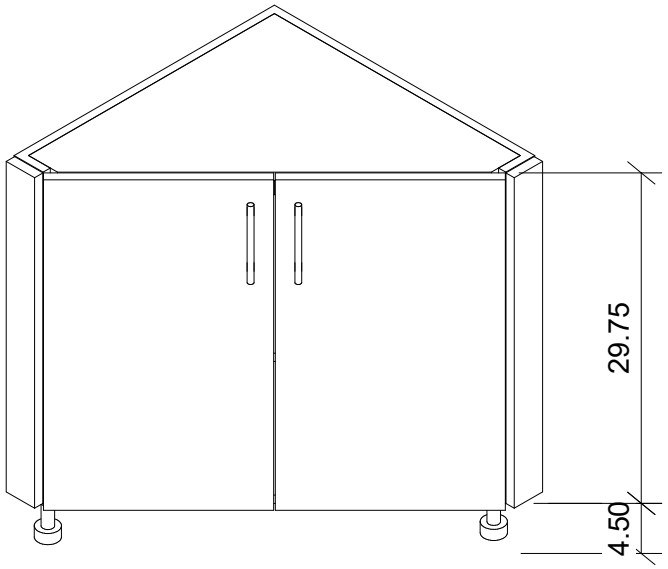

Product Description	
AEB: Outdoor Corner base 2 Doors NOTE: 27″ cabinets door width 16.81″ 24″ cabinet door width 14.69″	
27” Depth SKU	24” Depth SKU
AEB2702	AEB2402

Tall Storage Cabinets

- Available in heights of 84", 90" and 96". These sizes include the cabinet box and the 4.5" high adjustable leg.
- Cabinets 84"H tall bases 18" or 21"W are available with a single Full-Height Door. 84"H tall bases 24"W and wider are available with 2 Full-Height Doors.
- 90"H and 96"H tall bases have 2 Doors (1 upper, 1 lower) at 18"W and 21"W or 4 Doors at 24"W and wider.
- The oven cabinets (TT) start at 27" in width.
- Cabinets come standard with 4.50" adjustable legs.
- A square-tapered stainless steel leg with adjustable foot is also available for an open contemporary look.
- Black anodized, toe kick may be ordered and cut on-site.
- Available with optional pull-out and stationary shelves.

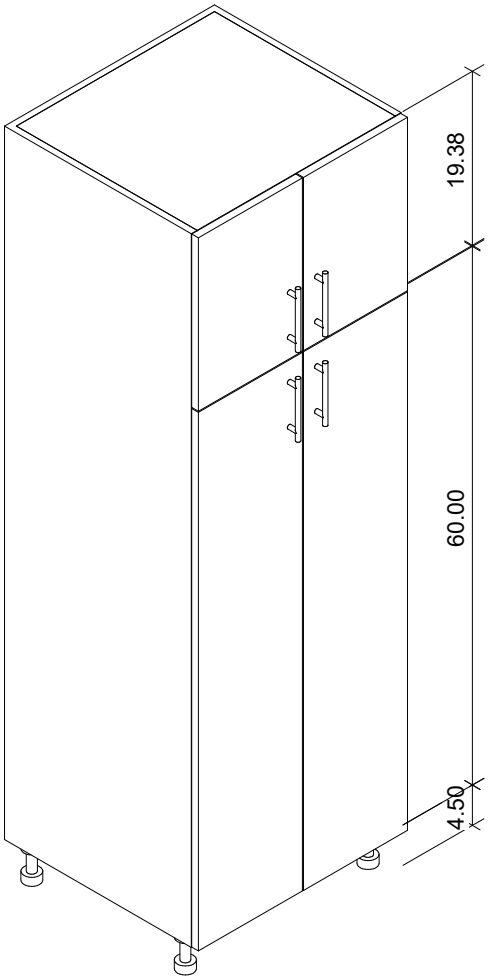

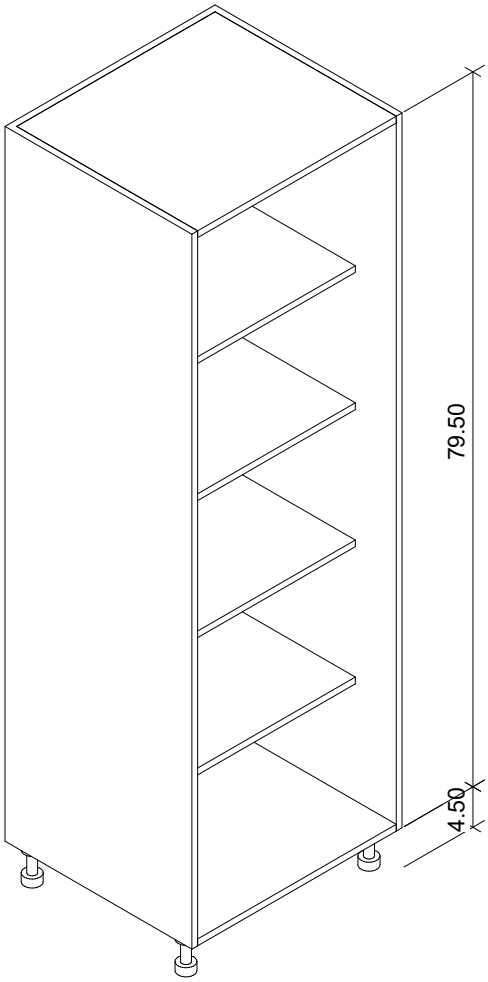

Door removed to show shelving

Tall Storage Cabinets - TBXXXX 24” Deep

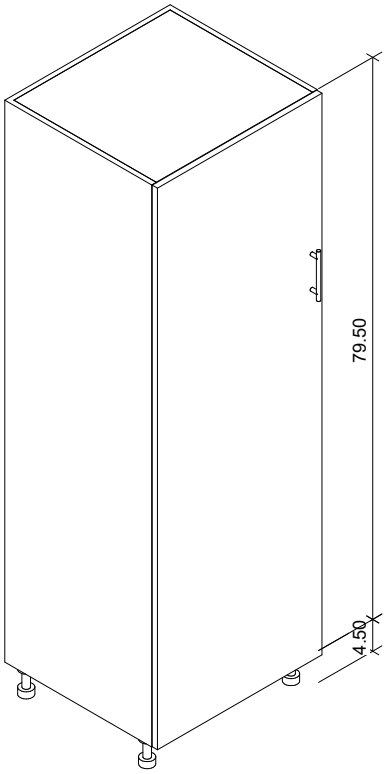

Product Description	
TB: Tall base 1 Full Height Door	
24” Depth SKU	
TB1884-LH	TB1884-RH
TB2184-LH	TB2184-RH

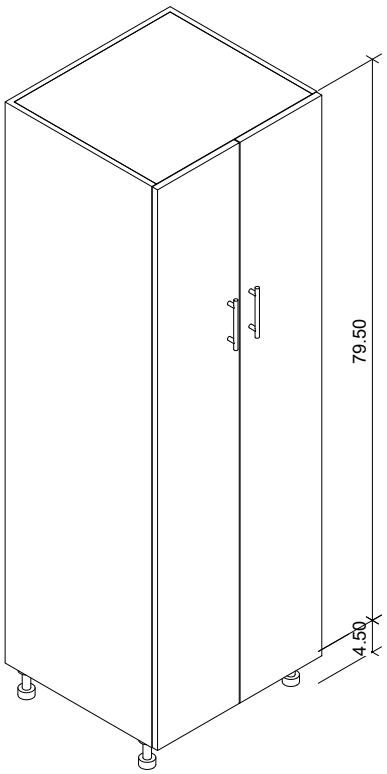

Product Description
TB: Tall base 2 Full-Height Doors
24” Depth SKU
TB2484
TB2784
TB3084
TB3384
TB3684

Tall Storage Cabinets - TTXXXX 24” Deep

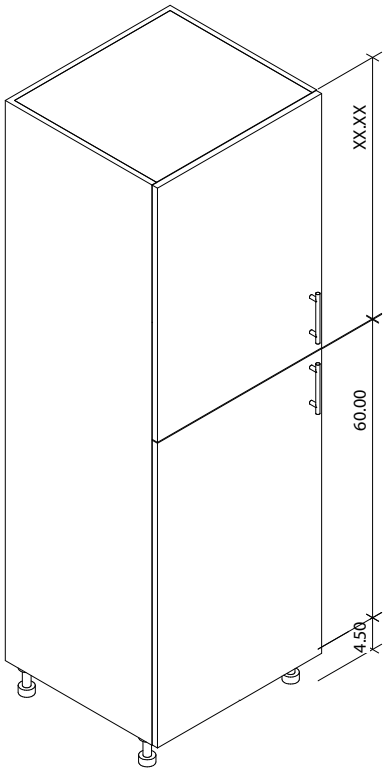

Product Description	
TB: Tall base 1 Upper Door, 1 Lower Door	
24” Depth SKU	
TB1890-LH	TB1890-RH
TB1896-LH	TB1896-RH
TB2190-LH	TB2190-RH
TB2196-LH	TB2196-RH

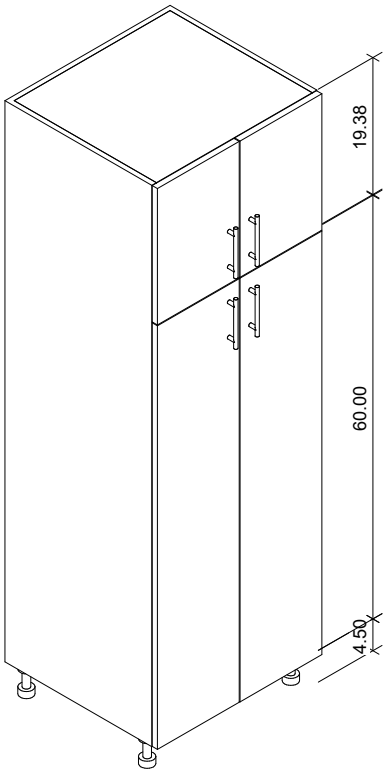

Product Description		
TB: Tall base 4 Door		
84” Tall	90” Tall	96” Tall
TB2484-4	TB2490-4	TB2496-4
TB2784	TB2790	TB2796
TB3084	TB3090	TB3096
TB3384	TB3390	TB3396
TB3684	TB3690	TB3696

Tall Oven Cabinets - TTXXXX 24” Deep

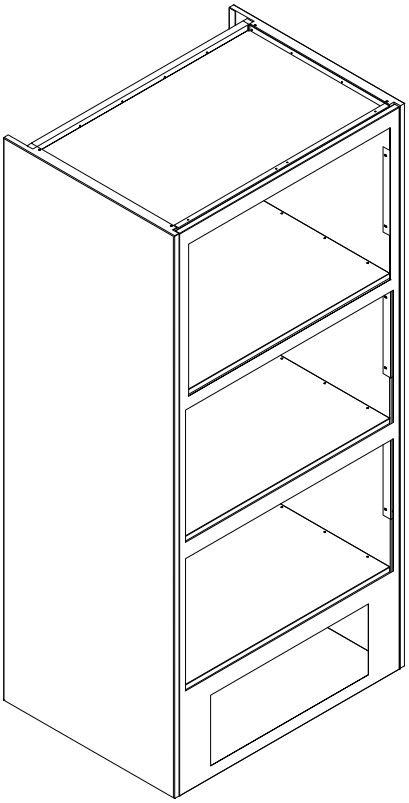

Product Description		
TT: Tall Oven Cabinet 2 Door, 1 Drawer		
84” Tall	90” Tall	96” Tall
TT2784	TT2790	TT2796
TT3084	TT3090	TT3096
TT3384	TT3390	TT3396
TT3684	TT3690	TT3696

Cabinet Accessories

We offer a variety of different shelving options including half-depth, full-depth, pullout, and heavy duty pullout shelves for ice chests.

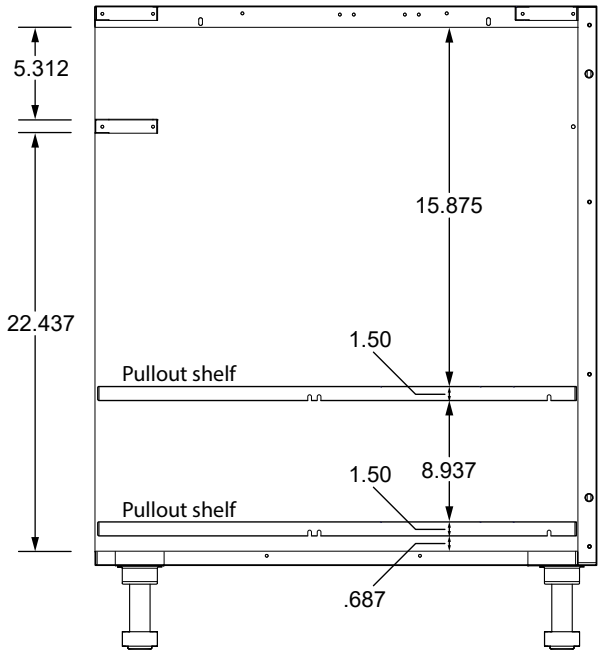

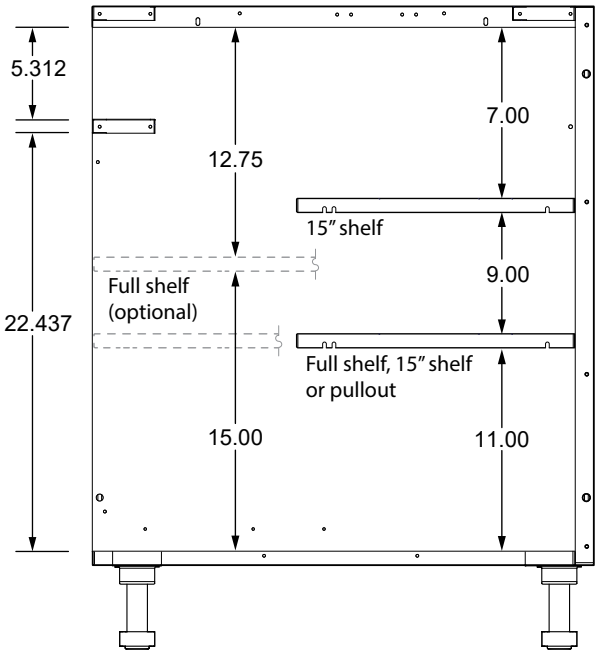

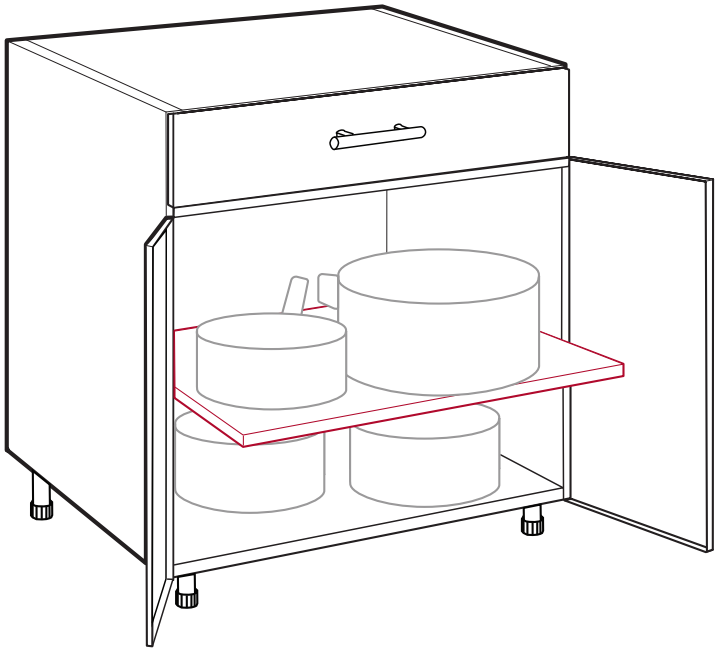

Product Description
OSHXX: Half-Depth Shelves
27" Depth SKU
OSH12
OSH15
OSH18
OSH21
OSH24
OSH30
OSH33
OSH36
OSH39
OSH42
OSH45
OSH48

Cabinet Accessories - Pullout Shelving

Product Description	
OSHXXYY: Full-Depth shelves	
27” Depth SKU	24” Depth SKU
OSH1227	OSH1224
OSH1527	OSH1524
OSH1827	OSH1824
OSH2127	OSH2124
OSH2427	OSH2424
OSH2727	OSH2724
OSH3027	OSH3024
OSH3327	OSH3324
OSH3627	OSH3624
OSH3927	OSH3924
OSH4227	OSH4224
OSH4527	OSH4524
OSH4827	OSH4824

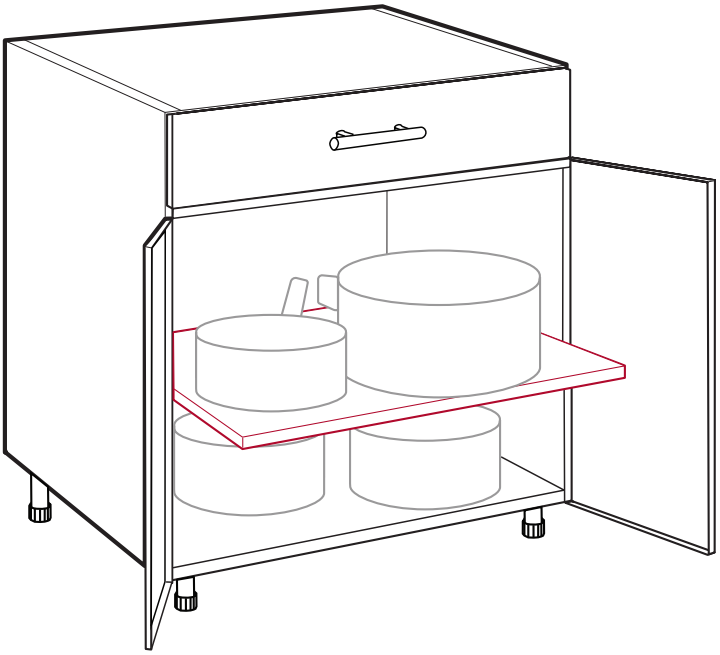

Product Description
OSHXXP: Pull-out Shelf
Pullout SKU
OSH12P
OSH15P
OSH18P
OSH21P
OSH24P
OSH27P
OSH30P
OSH33P
OSH36P
OSH39P
OSH42P
OSH45P
OSH48P

Cabinet Accessories - Pullout Shelving

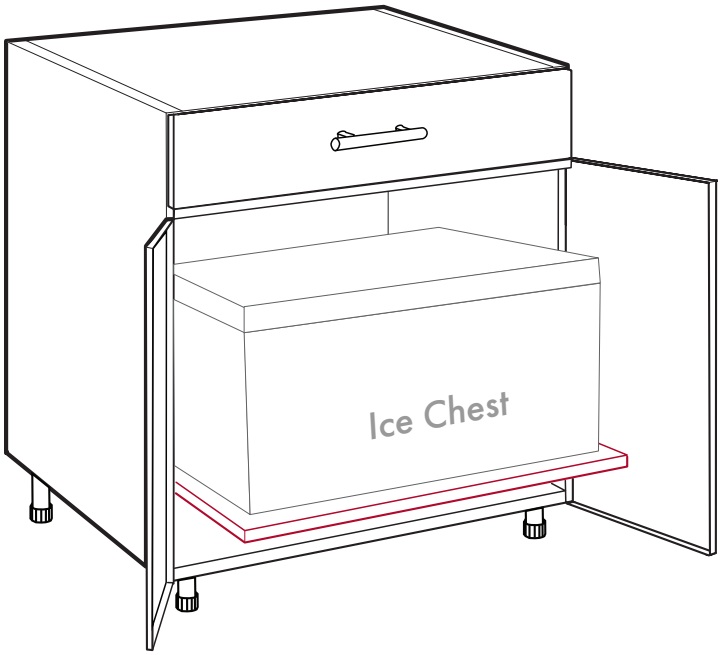

Product Description
OSHXXPCHEST: Pullout Shelf with heavy duty glides, designed for ice chests, can hold up to 132 lbs.

27” and 24” Depth SKU
OSH21PCHEST
OSH24PCHEST
OSH27PCHEST
OSH30PCHEST
OSH33PCHEST
OSH36PCHEST
OSH39PCHEST
OSH42PCHEST
OSH45PCHEST
OSH48PCHEST

Cabinet Accessories - Trash Pullout

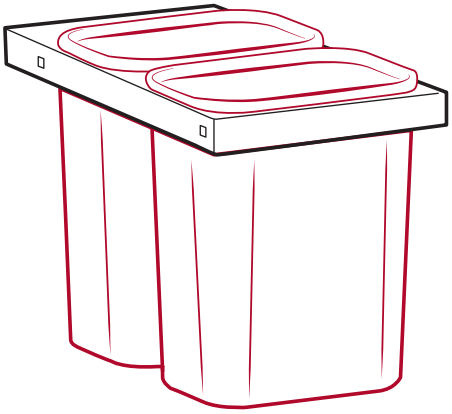

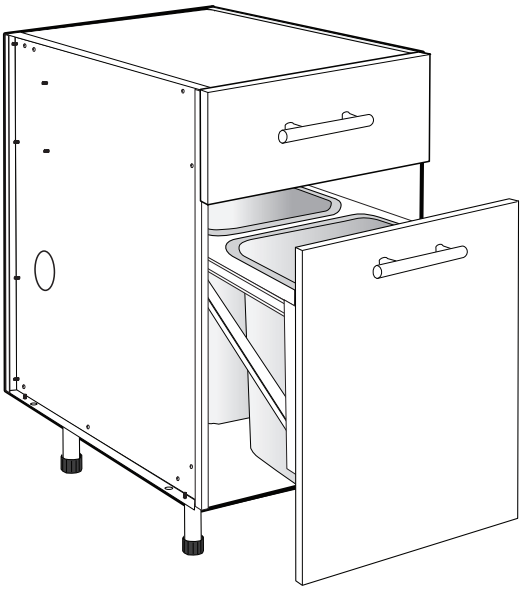

Product Description	
OTP: Trash pullout accessory Designed to fit 15 - 24” wide OBF, OBD, OBB Side Burner cabinets and 36”, 42” and 48” Grill Cabinets.	
SKU	**Description**
OTP15	Single Trash for 15″ cabinet or 1 side of 30″ Grill cabinet
OTP16.5	Single Trash for 1 side of 33″ Grill cabinet
OTP18	Double Trash for 18″ cabinet or 36″ Grill - side burner
OTP19.33	Double Trash for 58″ Grill cabinet
OTP20.67	Double Trash for 62″ Grill cabinet
OTP21	Double Trash for 21″ cabinet or 1 side of 42″ Grill cabinet
OTP24	Double Trash
OTP24D	Double Trash Deep
OTP27	Double Trash
OTP30	Double Trash
OTP33	Double Trash

Cabinet Accessories - Under-counter Appliance Spacers

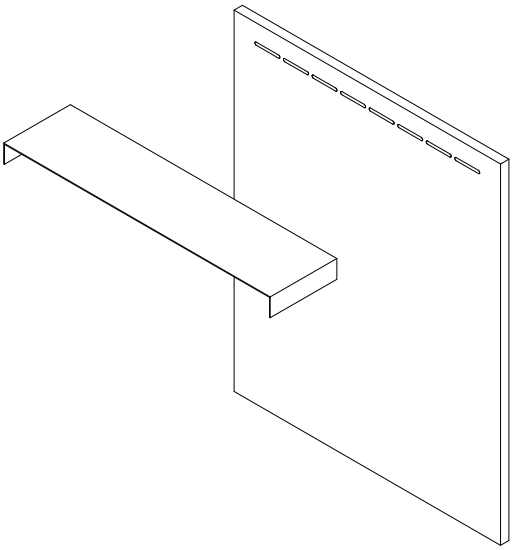

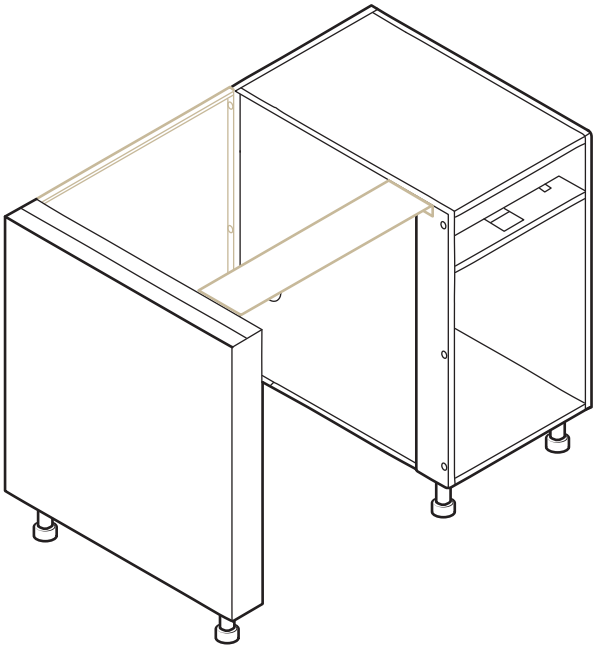

EXAMPLE:
ORS used as a spacer, creating an opening for an appliance.

Product Description
ORS: Rear vented spacer panel used to "lock-in" exact size opening for undercounter appliances. Used as a back panel for undercounter appliance space when needed. Available in 1/8" increments as needed. Custom widths available, contact Sales for information. Non-Vented versions of all sizes are available. Example SKU: ORS15.25

Vented SKU	Non-Vented SKU
ORS15	ORS15 NV
ORS15.25	ORS15.25 NV
ORS15.50	ORS15.50 NV
ORS18	ORS18 NV
ORS18.25	ORS18.25 NV
ORS20.25	ORS20.25 NV
ORS20.50	ORS20.50 NV
ORS20.75	ORS20.75 NV
ORS21	ORS21 NV
ORS21.25	ORS21.25 NV
ORS21.75	ORS21.75 NV
ORS22	ORS22 NV
ORS22.25	ORS22.25 NV
ORS23	ORS23 NV
ORS23.75	ORS23.75 NV
ORS24	ORS24 NV
ORS24.25	ORS24.25 NV
ORS24.50	ORS24.50 NV
ORS24.75	ORS24.75 NV
ORS26.25	ORS26.25 NV
ORS27.25	ORS27.25 NV
ORS28.25	ORS28.25 NV
ORS28.50	ORS28.50 NV
ORS29	ORS29 NV
ORS30	ORS30 NV
ORS30.25	ORS30.25 NV
ORS30.75	ORS30.75 NV
ORS31.50	ORS31.50 NV
ORS33	ORS33 NV
ORS36	ORS36 NV
ORS36.38	ORS36.38 NV
ORS38	ORS38 NV
ORS39	ORS39 NV
ORS39.38	ORS39.38 NV
ORS48	ORS48 NV

Cabinet Accessories - Fillers and Panels

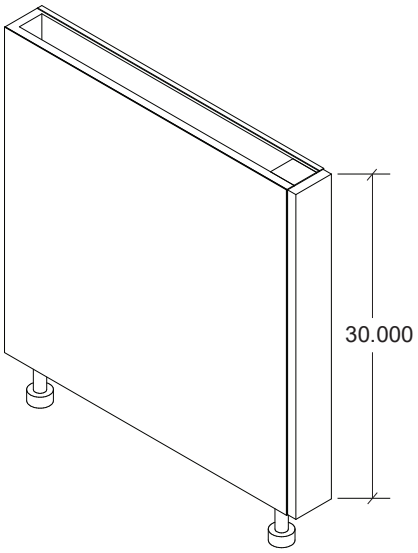

Product Description
ORP: Column for countertop support with one finished side for ending a run with an undercounter appliance. Attaches to a cabinet or another column via an ORS panel. Comes in two standard widths and four standard depths to match cabinets with or without back panels. Can be upgraded to match door styles on finished side. Two adjustable legs to match those on cabinetry. ELEC suffix denotes standard GFCI cutout on face of ORP. Cutout is 4” down from the top of the ORP. OCS suffix denotes use with OCS countertop support. NOTE: When ordering, use the ORP prefix, then choose the desired depth and width. Example: ORP27.88 2.88 A tapered SSLEG cannot be used with all panels.

SKU		
Prefix	Depth	Width
ORP	24.88	2.88
ORP	24.88	2.88 OCS
ORP	24.88	3.00
ORP	24.88	3.88
ORP	24.88	3.88 OCS
ORP	24.88	3.88L ELEC
ORP	24.88	3.88L OCS ELEC
ORP	24.88	3.88R ELEC
ORP	24.88	3.88R OCS ELEC
ORP	24.88	6.00
ORP	25.63	2.88
ORP	25.63	2.88 OCS
ORP	25.63	3.88
ORP	25.63	3.88L ELEC
ORP	25.63	3.88L OCS ELEC
ORP	25.63	3.88R ELEC
ORP	25.63	3.88R OCS ELEC
ORP	27.88	2.88
ORP	27.88	2.88 OCS
ORP	27.88	3.00
ORP	27.88	3.88
ORP	27.88	3.88 OCS
ORP	27.88	3.88L ELEC
ORP	27.88	3.88L OCS ELEC
ORP	27.88	3.88R ELEC

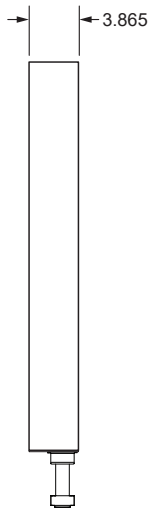

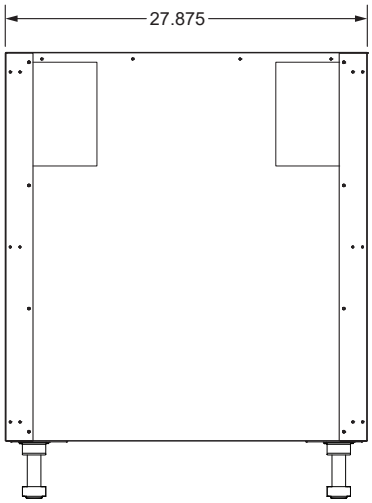

Cabinet Accessories - Fillers and Panels

ORP	27.88	3.88R OCS ELEC
ORP	28.63	2.88
ORP	28.63	2.88 OCS
ORP	28.63	3.00
ORP	28.63	3.88
ORP	28.63	3.88 OCS
ORP	28.63	3.88L ELEC
ORP	28.63	3.88L OCS ELEC
ORP	28.63	3.88R ELEC
ORP	28.63	3.88R OCS ELEC
ORP	29.88	3.88
ORP	29.88	3.88 OCS
ORP	30.63	3.88
ORP	33.88	3.88

Cabinet Accessories - Fillers and Panels

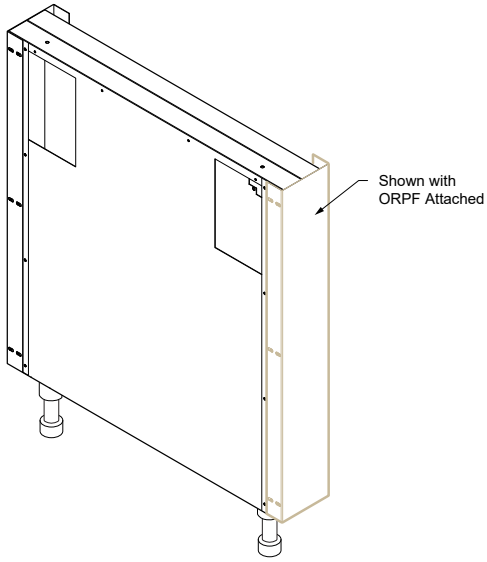

Product Description
OBX: Column for countertop support between undercounter appliances in the middle of a run or an inside corner. Attaches to a cabinet or another column via an ORS panel. Comes in two standard widths and four standard depths to match cabinets with or without back panels. Two adjustable legs to match those on cabinetry. NOTE: When ordering, use the OBX prefix, then choose the desired depth and width. Example: OBX27.88 2.88

SKU		
Prefix	Depth	Width
OBX	24.88	2.88
OBX	24.88	3.88
OBX	24.88	3.88 ELEC
OBX	25.63	2.88
OBX	25.63	3.88
OBX	25.63	3.88 ELEC
OBX	27.88	2.88
OBX	27.88	3.88
OBX	27.88	3.88 ELEC
OBX	28.63	2.88
OBX	28.63	3.88
OBX	28.63	3.88 ELEC

Product Description
OBXF - Front filler to increase width of OBX. Custom sizes as needed. Example SKUs: OBXF 4.25, OBXF 6.00

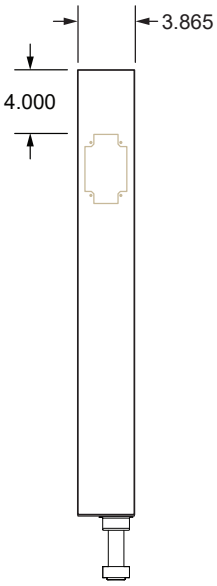

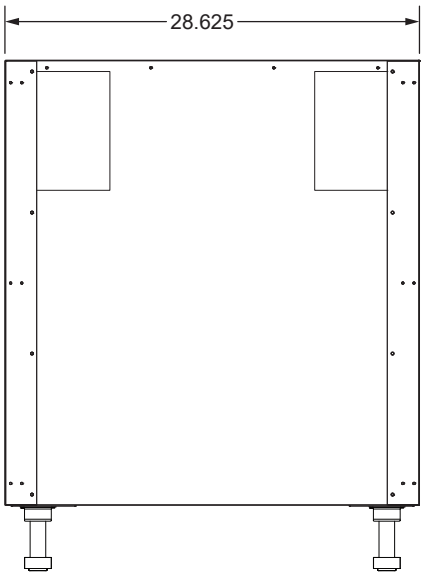

Cabinet Accessories - Fillers and Panels

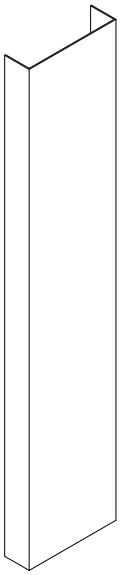

Product Description	
ORPS: Left/Right filler connects to ORP to increase skin depth. NOTE: Custom sizes created as needed. List size of ORP skin is attaching to followed by size increase. Example: ORPS27.88 2.88 3.00 Depth Width Skin Size	
27" Depth SKU	**Description**
ORPSXX XX XXL	Custom Left filler to connect to increase skin depth of ORP or OBX (first two dimensions are ORP/ OBX depth and width).
ORPSXX XX XXR	CUSTOM Right filler to connect to increase skin depth of ORP or OBX (first two dimensions are ORP depth and width).

Cabinet Accessories - Fillers and Panels

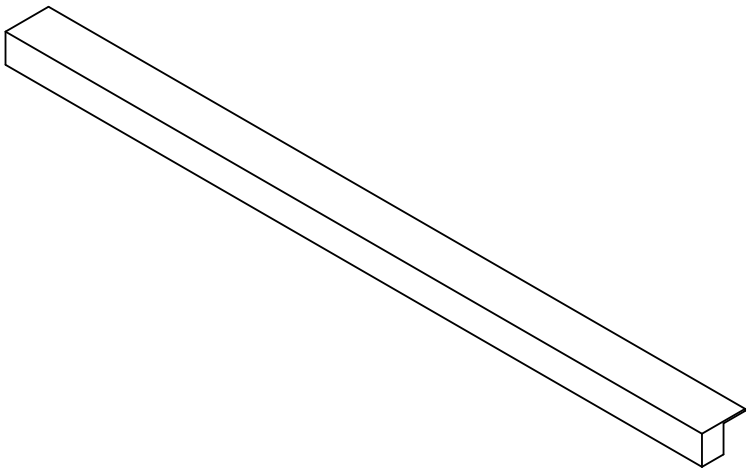

Product Description	
OFTS: Horizontal top spacer to fill gap between refrigerator top and countertop bottom. NOTE: Custom sizes as required. Example SKU: OFTS 1.00	
27” Depth SKU	**Description**
OFTS 1.00	Refrigerator spacer to fill gap between refrigerator top and countertop bottom - 24.25’’W x 1’’H
OFTS 1.31	Refrigerator spacer to fill gap between refrigerator top and countertop bottom - 24.25’’W x 1.31’’H (Standard)
OFTS 1.75	Refrigerator spacer to fill gap between refrigerator top and countertop bottom - 24.25’’W x 1.75’’H
OFTS 2.00	Refrigerator spacer to fill gap between refrigerator top and countertop bottom - 24.25’’W x 2’’H.
OFTS 2.25	Refrigerator spacer to fill gap between refrigerator top and countertop bottom - 24.25’’W x 2.25’’H. Tape# 6662 Blank=7.5 X 27

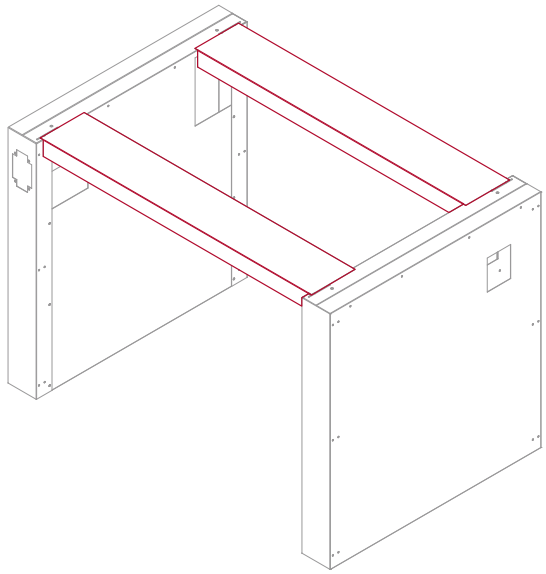

Product Description
OCS: Countertop support spacer. Consists of 3 aluminum extrusions with considerable stiffness. **While the span extrusions are extremely strong, our company does not warrant the spans to keep countertops from cracking, especially if mistreated during use. Your fabricator/installer must make the final call if there are any questions on stability across the span.** Example SKU: OCS30
SKU
OCS30
OCS33
OCS36
OCS39
OCS42
OCS45
OCS48

Cabinet Accessories - Under-counter Appliance Spacers

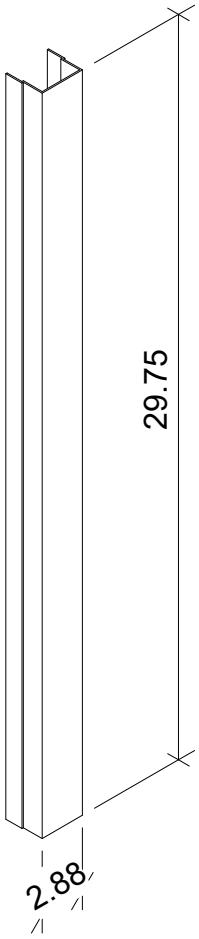

Product Description
OFLF: Front base cabinet filler, sits flush with door/drawer faces, attaches between two base cabinets. 1”W minimum, available in 1/8” increments as needed. Example: OFLF 1.25 Width
SKU
OFLF X.XX

Product Description
OFL: Rear base cabinet filler, installs flush with cabinet back or back panels if present, attaches between two base cabinets. 1”W minimum, available in 1/8” increments as needed. Example: OFL 1.25 Width
SKU
OFL X.XX

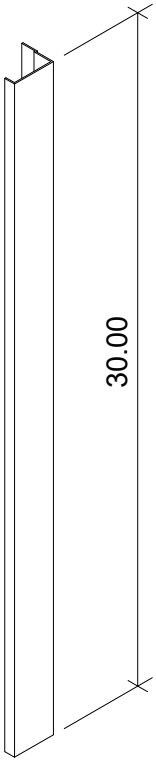

Product Description
OFLF END: Front base cabinet end filler, sits flush with door/drawer faces, attaches between a base cabinet and a wall. 0.5”W minimum, available in 1/8” increments as needed. Flat bend on one side for easy installation to wall, specify side. Example: OFLF END 2.00
SKU
OFLF END X.XX

Cabinet Accessories - Under-counter Appliance Spacers

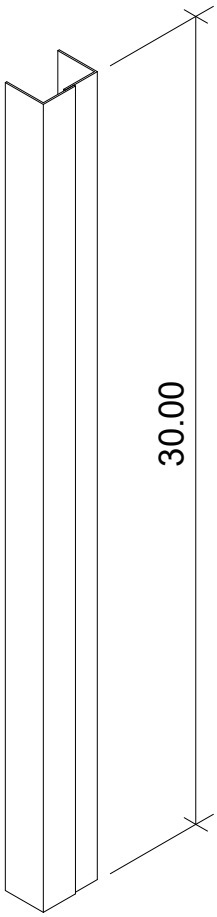

Product Description
OFLA: Adjustable front base cabinet filler, sits flush with door/drawer faces, attaches between two base cabinets
SKU
OFLA 1.0-1.50
OFLA 1.5-2.38
OFLA 2.0-3.5

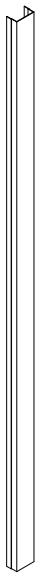

Product Description	
TFLF: Tall base cabinet front filler, sits flush with door/drawer faces. 1”W minimum, available in 1/8” increments as needed. Specify tall base height. Example SKUs: TFLF03XX, TFLF04.5XX	
27” Depth SKU	**Description**
TFLF03XX	3” Tall Front Filler with bend. Specify 84”, 90” or 96” height.
TFLF04XX	6” Tall Front Filler with bend. Specify 84”, 90” or 96” height.
TFLFXXXX	CUSTOM Tall Front Filler with bend. Engineering charges may apply. Contact Sales for more information.

Cabinet Accessories - Under-counter Appliance Spacers

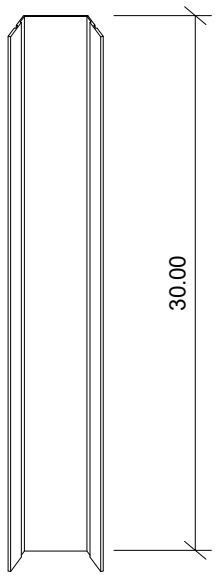

Product Description
OAF45: 45 degree front base corner filler, sits flush with door/drawer faces, attaches to two base cabinets, OBX columns, or a combination of the two depending on your design. SKUs are designated by overall filler width, specify each side of bend. 2”W overall minimum, available in 1/8” increments as needed. Example: OAF45 4.00
SKU
OAF45XX

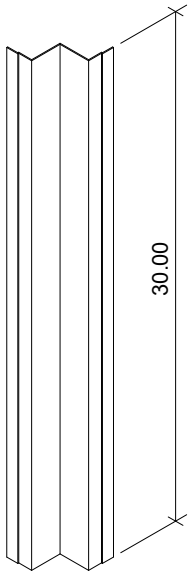

Product Description
OAF90: 90 degree front base corner filler, sits flush with door/drawer faces, attaches to two base cabinets, OBX columns, or a combination of the two depending on your design. SKUs are designated by overall filler width, specify each side of bend. 2”W overall minimum, available in 1/8” increments as needed. Example: OAF90 8.00
SKU
OAF90XX

Cabinet Accessories - Under-counter Appliance Spacers

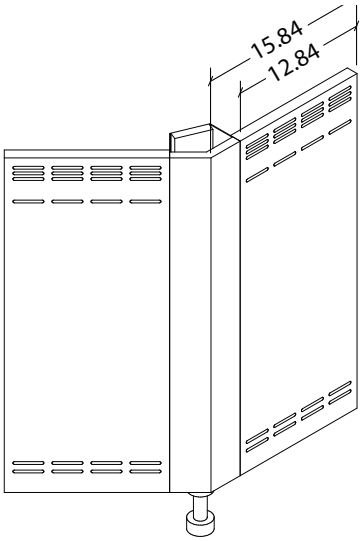

Product Description	
OAR45: Rear corner support column with two back panels to attach in void where OAF45 front base corner filler is used. Panel sizes based on corner filler size, single adjustable leg on column to match those on cabinetry.	
27” Depth SKU	**Description**
OAR45XX NO VENT	Solid Panel
OAR45XX VENT	Vented Panel
OAR45XX EQUAL BP VENT	Galvanized and vented panels, for use with Equal Back Panels

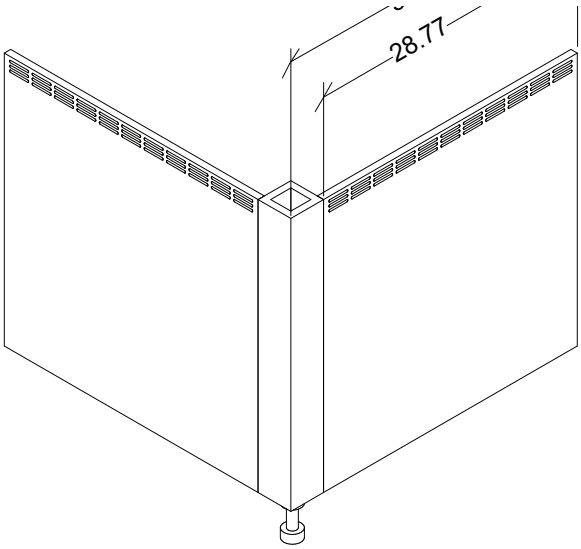

Product Description	
OAR90: Rear corner support column with two back panels to attach in void where OAF90 front base corner filler is used. Panel sizes based on corner filler size, single adjustable leg on column to match those on cabinetry.	
27” Depth SKU	**Description**
OAR90XX NO VENT	Solid Panel
OAR90XX VENT	Vented Panel
OAR90XX EQUAL BP VENT	galvanized and vented panels, for use with Equal Back Panels

Cabinet Accessories - Under-counter Appliance Spacers

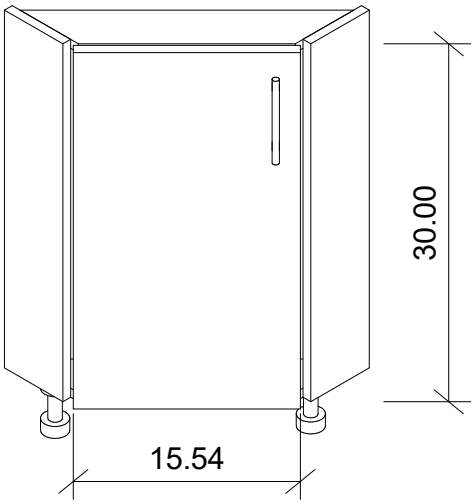

Product Description
OFF: Full-Height door filler cabinet, 4”D with no back wall for easy access to area behind. 1 or 2 doors depending on width, attaches between two base cabinets. 3”W increments to match standard base cabinets, corner versions available.

SKU
OFF09-LH
OFF09-RH
OFF12-LH
OFF12-RH
OFF14-LH
OFF14-RH
OFF21-LH
OFF21-RH
OFF24-LH
OFF24-RH
OFF33
OFF36

Product Description
OFF CORNER: Full-Height door filler cabinet, 4”D with no back wall for easy access to area behind. Installs in between two cabinets at a corner. Example: OFF15.5 CORNER

SKU
OFF15.5 CORNER

Cabinet Accessories - Side Panels

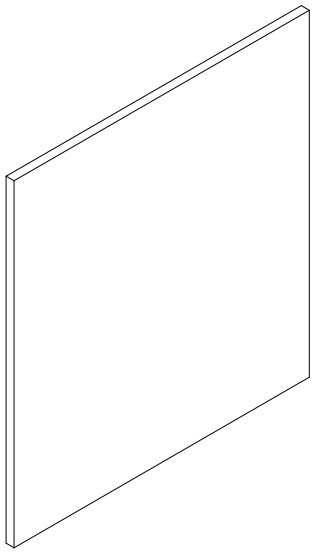

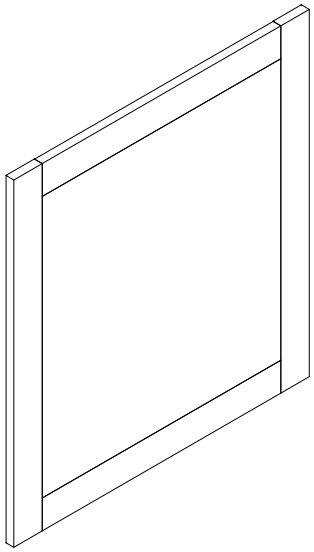

Product Description	
OSP: ¾” Thick side panels for base cabinets. Panels sit flush with door/drawer faces and back panels if used. Specify based on cabinet side and depth (select .75” deeper for use with back panels).	
24” Depth SKU	
OSP 24.88L	
OSP 24.88R	
OSP 25.63L	24”D Cabinet with back panel
OSP 25.63R	24”D Cabinet with back panel
27” Depth SKU	
OSP 27.88L	
OSP 27.88R	
OSP 28.63L	27”D Cabinet with back panel
OSP 28.63R	27”D Cabinet with back panel

OSP panels can be made to match any door style:

SKU Prefix	Door Style
OSP KW	Key West Panel
OSP KW BB	Key West Bead Board Center
OSP KW LV	Key West Louvered Center
OSP KW SG	Key West Seaglass Center (Sky Blue, Seafoam Green, or Cloud White)
OSP KW TX	Key West Textured Center (Bark or Weave)
OSP PB	Palm Beach Panel
OSP PB SG	Palm Beach Seaglass Center (Sky Blue, Seafoam Green, or Cloud White)
OSP PB TX	Palm Beach Textured Center (Bark or Weave)
OSP LD	London Style Panel
OSP NP	Newport Style Panel

Cabinet Accessories - Side Panels

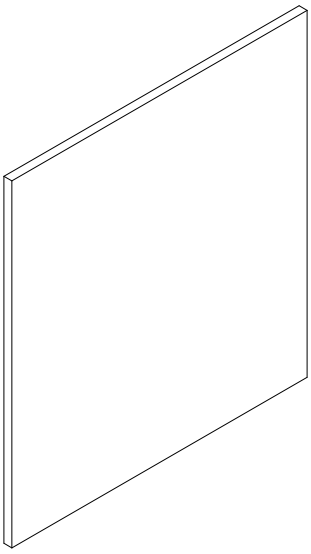

Product Description	
OSP EXTEND: ¾” Thick side panels for base cabinetry, extends past the back of cabinet to cover gaps. Panels sit flush with door/drawer faces in front. Specify based on cabinet side and depth, specify depth required.	
27” Depth SKU	24” Depth SKU
OSP 27.88L EXTEND 3.0	OSP 24.88L EXTEND 3.0
OSP 27.88R EXTEND 3.0	OSP 24.88R EXTEND 3.0

Cabinet Accessories - Side Panels

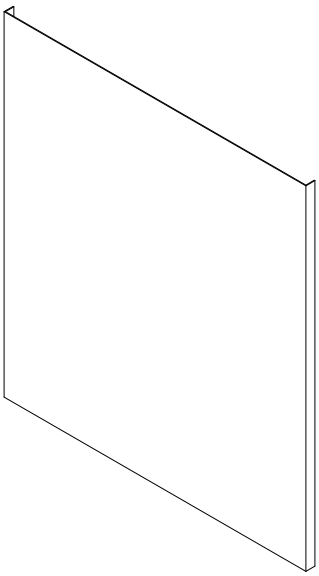

Product Description	
OFE: Base cabinet flush side panel. Sits flush to cabinet side, specify based on cabinet side and depth.	
27” Depth SKU	24” Depth SKU
OFE 27L	OFE 24L
OFE 27R	OFE 24R

Product Description	
OFE APPLIANCE: Base cabinet flush side panel. Sits flush to cabinet side, has round knockout access hole for plumbing/electrical in rear of panel, used to finish a cabinet side adjacent to an undercounter appliance, specify based on cabinet side and depth.	
27” Depth SKU	24” Depth SKU
OFE 27L APPLIANCE	OFE 24L APPLIANCE
OFE 27R APPLIANCE	OFE 24R APPLIANCE

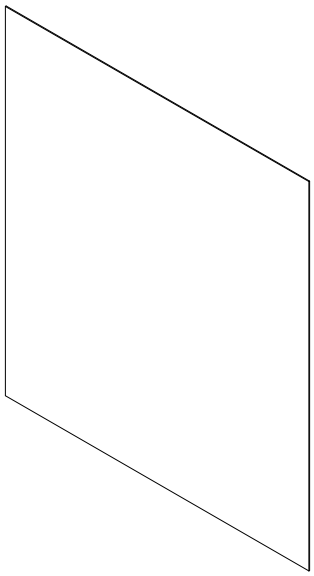

Product Description
OFEGF: Base cabinet galvanized flush side panel. Sits flush in cabinet side, used to fill in cabinet side for adhering waterfall countertops and other materials, specify based on cabinet depth.
18” Depth SKU
OFEGF18
24” Depth SKU
OFEGF24
27” Depth SKU
OFEGF27

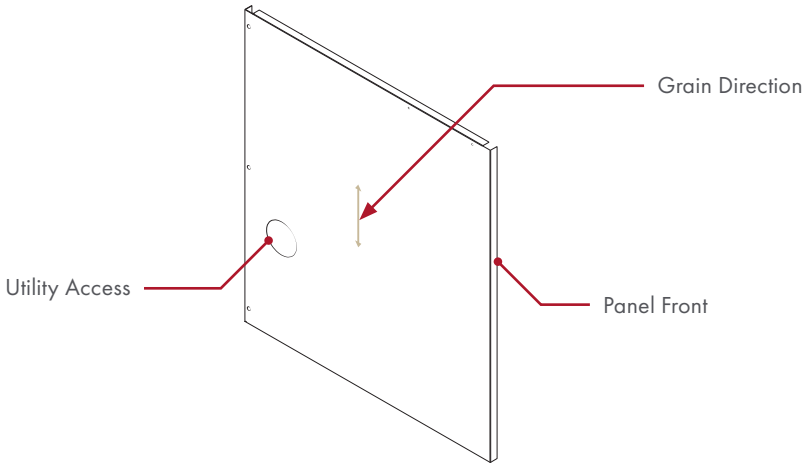

Cabinet Accessories - Fillers and Panels

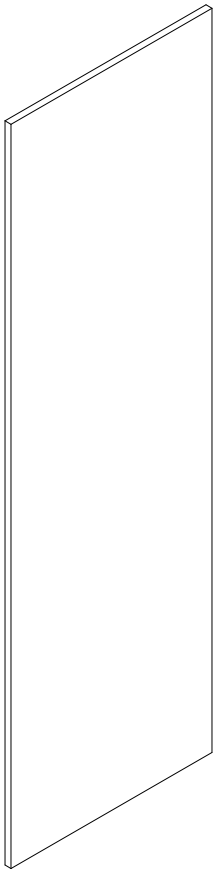

Product Description		
OSPT: ¾” Thick tall base side panel, 24.88”W x XX”H, sits flush with door/drawer faces, specify tall base height and side.		
SKU		
84”H Cabinet	90”H Cabinet	96”H Cabinet
OSPT 2484L	OSPT 2490L	OSPT 2496L
OSPT 2484R	OSPT 2490R	OSPT 2496R

Product Description		
OFET: Tall base flush side panel, 24”W x XX”H, sits flush to cabinet side, specify tall base height and side.		
SKU		
84”H Cabinet	90”H Cabinet	96”H Cabinet
OFET 2484L	OFET 2490L	OFET 2496L
OFET 2484R	OFET 2490R	OFET 2496R

Cabinet Accessories - Back Panels

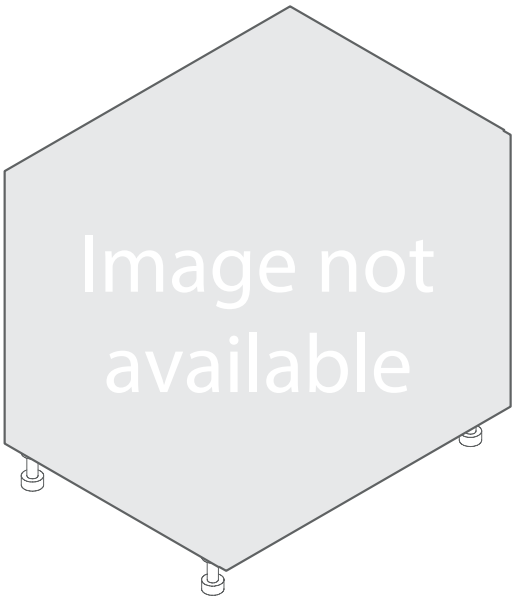

Product Description
OBP: ¾" Thick back panel for base cabinets. Fits exact width of cabinet up to 36"W, wider cabinets use two smaller back panels *(ex. OBF4202 uses two 21"W back panels).* Example SKUs: OBP15, OBP24, OBP36

SKU	Description
OBP09	9" back panel
OBP12	12" back panel
OBP15	15" back panel
OBP18	18" back panel. Order 1 for an 18" or 2 for a 36" non-appliance cabinet.
OBP19.5	19 1/2" back panel. Order 2 for a 39" non-appliance cabinet.
OBP21	21" back panel. Order 1 for a 21" cabinet or 2 for a 42" cabinet.
OBP22	22" back panel. Order 3 for Galley sink - OBS6603.
OBP22 EVO	22" back panel for EVO
OBP22.5	22 1/2" back panel. Order 2 for a 45" non-appliance cabinet.
OBP24	24" back panel. Order 1 for a 24" cabinet or 2 for a 48" cabinet.
OBP26	26" back panel. Order 2 for a 52" non-appliance cabinet.
OBP27	27" back panel
OBP30	30" back panel
OBP33	33" back panel
OBP36	36" back panel
OBP36 ADA	36" back panel for OBS3600 ADA
OBP39 ADA	39" back panel for OBS3900 ADA
OBP42 ADA	42" back panel for 42" wide ADA sink bases
OBP48 ADA	48" back panel for 48" wide ADA sink bases

Cabinet Accessories - Back Panels

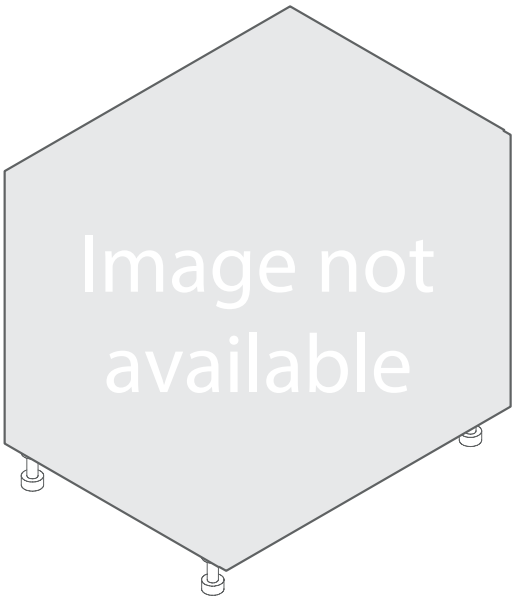

Product Description
OBPV: ¾” Thick vented back panel for base cabinets. Use with cooking appliance cabinets (OGB, OBB, etc.), fits exact width of cabinet up to 36”W, wider cabinets use two smaller back panels *(ex. OGB5841 uses two 29”W back panels)*. Example SKUs: OBPV21, OBPV31, OBPV33

SKU	Description
OBPV15	15” back panel
OBPV18	18” back panel. Order 1 for aside burner or 2 for a 36” grill cabinet.
OBP19.5	19 1/2” back panel. Order 2 for a 39” non-appliance cabinet.
OBPV21	21” back panel. Order 2 for a 42” grill cabinet.
OBPV24	24” back panel. Order 2 for a 48” grill cabinet.
OBPV24 OGF	24” back panel. Order 2 for a 48” OGF cabinet.
OBPV27	27” back panel. Order 2 for a 54” grill cabinet.
OBPV29	29” back panel. Order 2 for a 58” grill cabinet.
OBPV30	30” back panel
OBPV31	31” back panel. Order 2 for a 62” grill cabinet.
OBPV31 OGF	36” back panel. Order 2 for 62” OGF cabinet.
OBPV33	33” back panel
OBPV36	36” back panel

Cabinet Accessories - Back Panels

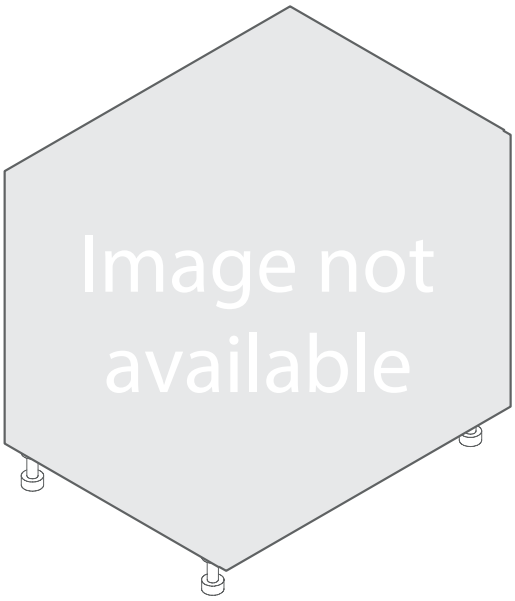

Product Description
OBPVGF: Base cabinet galvanized flush back panel. Sits flush in cabinet back, used to fill in cabinet back for adhering waterfall countertops and other materials, used in conjunction with Equal Back Panels, fits exact width of cabinet up to 39”W, wider cabinets use two smaller back panels.

SKU	Description
OBPVGF09	Galvanized 9” filler back panel
OBPVGF12	Galvanized 12” filler back panel
OBPVGF15	Galvanized 15” filler back panel
OBPVGF18	Galvanized 18” filler back panel. Order 1 for an 18” side burner or 2 for a 36” grill cabinet.
OBPVGF21	Galvanized 21” filler back panel. Order 1 for an 21” side burner or 2 for a 42” grill cabinet.
OBPVGF22.5	Galvanized 22.5” filler back panel. Order 2 for a 45” cabinet.
OBPVGF24	Galvanized 24” filler back panel. Order 2 for a 48” grill cabinet.
OBPVGF27	Galvanized 27” back panel. Order 2 for a 54” grill cabinet.
OBPVGF29	Galvanized 29” filler back panel. Order 2 for a 58” grill cabinet.
OBPVGF30	Galvanized 30” filler back panel.
OBPVGF31	Galvanzied 31” filler back panel. Order 2 for 62” OGF cabinet.
OBPVGF33	Galvanized 33” filler back panel
OBPVGF36	Galvanized 36” filler back panel
OBPVGF39	Galvanized 39” filler back panel

Cabinet Accessories - Back Panels

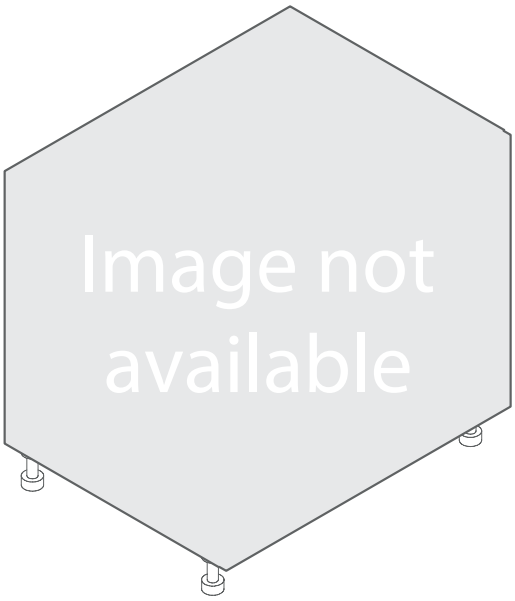

Product Description
Equal Back Panels: ¾” Thick back panels for base cabinets made to match any door style, widths 24”W – 36”W custom made to equally span across a run, must be ordered with OBPVGF galvanized filler back panels on corresponding cabinets for proper installation. Vented or non-vented depending on what cabinets they are being installed on.

SKU		
Door Style	Non-vented	Vented
Hampton	HM PANEL EQUAL BP	HM PANEL EQUAL BP VENTED
Key West	KW PANEL EQUAL BP	KW PANEL EQUAL BP VENTED
Key West Beadboard Center	KW BB CENTER EQUAL BP	KW BB CNETER EQUAL BP VENTED
Key West Louvered Center	KW LV CENTER EQUAL BP	KW LV CENTER EQUAL BP VENTED
Key West Seaglass Center (Sky Blue, Seafoam Green or Cloud White)	KW SG CENTER EQUAL BP	KW SG CENTER EQUAL BP VENTED
Palm Beach	PB PANEL EQUAL BP	PB PANEL EQUAL BP VENTED
Palm Beach Seaglass Center (Sky Blue, Seafoam Green or Cloud White)	PB SG CENTER EQUAL BP	PB SG CENTER EQUAL BP VENTED
Palm Beach Textured Center (Bark or Weave)	PB TX CENTER EQUAL BP	PB TX CENTER EQUAL BP VENTED
Trex LONDON	LD EQUAL BP	LD EQUAL BP VENTED
Trex NEWPORT	NP EQUAL BP	NP EQUAL BP VENTED

Cabinet Accessories - Back Panels

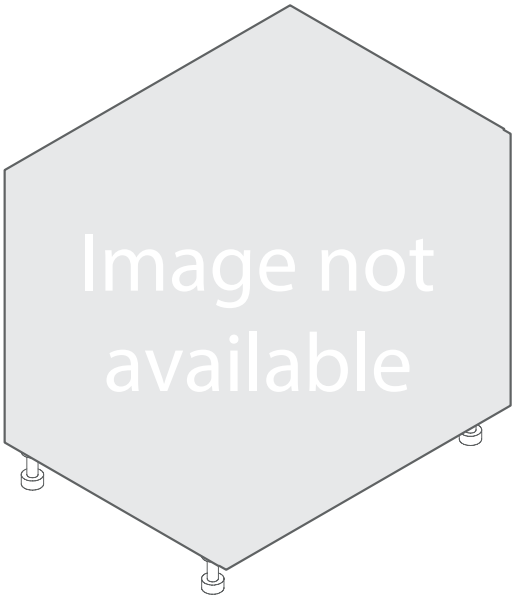

Product Description
Panels made to match any door/drawer style can be manufactured for most outdoor rated panel ready appliances such as refrigerators, ice makers, beverage centers, etc. Glass door frames in the Key West or Rio style are also possible. Please submit manufacturer specifications for panel(s) when requesting a kitchen quote.

Cabinet Accessories - Miscellaneous

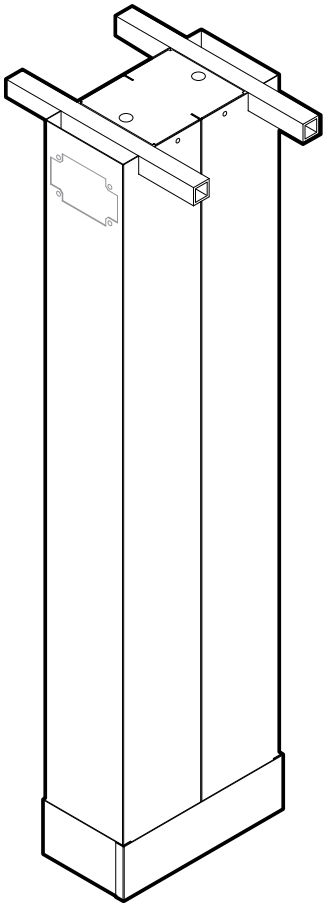

Product Description
OCP: Raised countertop support piers for creating a bar behind cabinets, 5”W x 10”D, 34.5” and 41” heights available, comes with adjustable feet and sliding bracket to cover them. Optional electrical cutout version available, must order with 1” x 1” support span (comes in 84” lengths, cut onsite as needed).
Standard SKU
OCP41
OCP34.5
With Electrical Cutout SKU
OCP41E
OCP34.5E
Tubular Support Span SKU
OCP SPAN

Cabinet Accessories - Miscellaneous

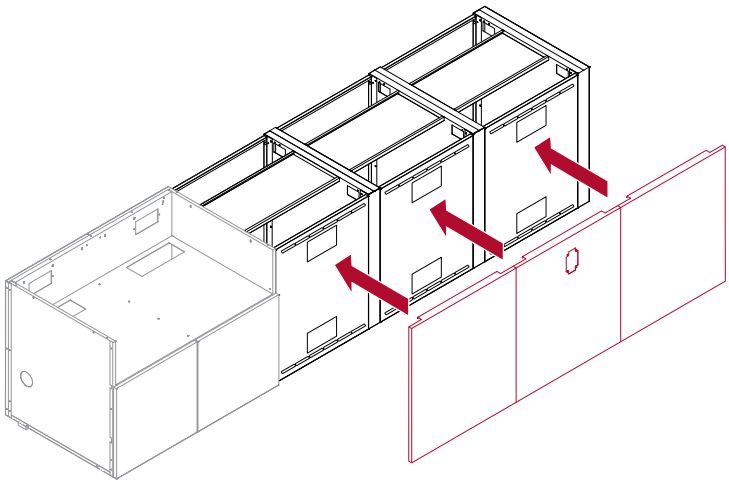

Product Description
PPS – Post and Panel System: Using a combination of supports, spacers, and panels you can create countertop space without the additional cost of doors or drawers. These parts assemble to be stand-alone units or connect with base cabinets. Ideal for multi-family spaces, the supports can also be brought down to ADA compliant height with our available ADA legs. Panels can be made to match any door style. 36”H versions of all PPS parts are available as well, with an extra option of 18”D. 36”H PPS parts are designated with a -TALL at the end of the SKU.

18” Depth SKU	Description
PPS SUPPORT MID 18-TALL	3”W x 18”D x 36”H Middle supports (unfinished, hidden from view)
PPS SUPPORT END 18-TALL	3”W x 18”D x 36”H End supports (one finished side for ending a run)
24” Depth SKU	**Description**
PPS SUPPORT MID 24	3”W x 24”D x 30”H Middle supports (unfinished, hidden from view)
PPS SUPPORT END 24	3”W x 24”D x 30”H End supports (one finished side for ending a run)
PPS SUPPORT MID 24-TALL	3”W x 24”D x 36”H Middle supports (unfinished, hidden from view)
PPS SUPPORT END 24-TALL	3”W x 24”D x 36”H End supports (one finished side for ending a run)
27” Depth SKU	**Description**
PPS SUPPORT MID 27	3”W x 27”D x 30”H Middle supports (unfinished, hidden from view)
PPS SUPPORT END 27	3”W x 27”D x 30”H End supports (one finished side for ending a run)

Cabinet Accessories - Miscellaneous

PPS SUPPORT MID 27-TALL	3″W x 27″D x 36″H Middle supports (unfinished, hidden from view)
PPS SUPPORT END 27-TALL	3″W x 27″D x 36″H End supports (one finished side for ending a run)

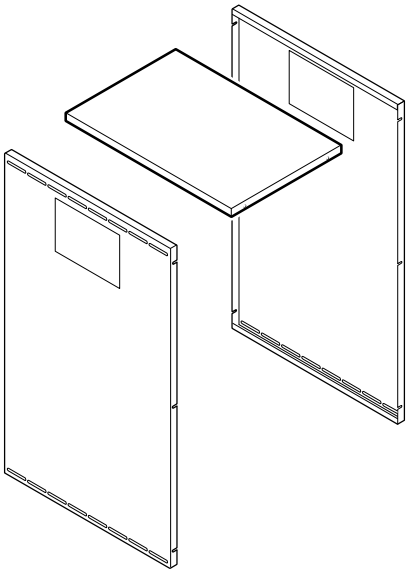

Product Description
Spacers consist of 3 panels that connect supports to each other, support to cabinet, or cabinets together. Finished panels hang over the spacers and supports for an even look, so specify panels based on total width of span. The finished panels are ¾” thick and sit flush with door/drawer fronts on cabinets as well as back panels if they are used.

Width	Spacer SKU	Panel SKU
9”W	PPS SPACER 9	PPS PANEL 9
	PPS SPACER 9-TALL	PPS PANEL 9-TALL
		PPS PANEL 9 KW
		PPS PANEL 9 KW-TALL
12”W	PPS SPACER 12	PPS PANEL 12
	PPS SPACER 12-TALL	PPS PANEL 12-TALL
		PPS PANEL 12 KW
		PPS PANEL 12 KW-TALL
15”W	PPS SPACER 15	PPS PANEL 15

Cabinet Accessories - Miscellaneous

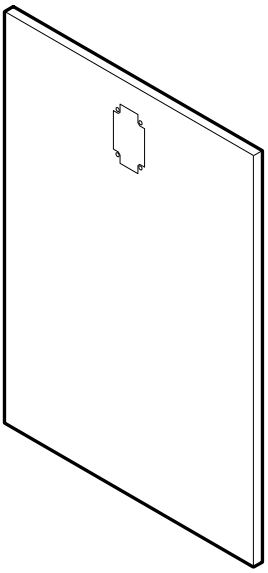

	PPS SPACER 15-TALL	PPS PANEL 15-TALL
		PPS PANEL 15 KW
		PPS PANEL 15 KW-TALL
18”W	PPS SPACER 18	PPS PANEL 18
	PPS SPACER 18-TALL	PPS PANEL 18-TALL
		PPS PANEL 18 KW
		PPS PANEL 18 KW-TALL
21”W	PPS SPACER 21	PPS PANEL 21
	PPS SPACER 21-TALL	PPS PANEL 21-TALL
		PPS PANEL 21 KW
		PPS PANEL 21 KW-TALL
24”W	PPS SPACER 24	PPS PANEL 24
	PPS SPACER 24-TALL	PPS PANEL 24-TALL
		PPS PANEL 24 KW
		PPS PANEL 24 KW-TALL
27”W	PPS SPACER 27	PPS PANEL 27
	PPS SPACER 27-TALL	PPS PANEL 27-TALL
		PPS PANEL 27 KW
		PPS PANEL 27 KW-TALL
30”W	PPS SPACER 30	PPS PANEL 30
	PPS SPACER 30-TALL	PPS PANEL 30-TALL
		PPS PANEL 30 KW
		PPS PANEL 30 KW-TALL
33”W	PPS SPACER 33	PPS PANEL 33
	PPS SPACER 33-TALL	PPS PANEL 33-TALL
		PPS PANEL 33 KW
36”W	N/A	PPS PANEL 36
		PPS PANEL 36-TALL
		PPS PANEL 36 KW
		PPS PANEL 36 KW-TALL
XX” W	N/A	PPS PANEL XX (specify)

Cabinet Accessories - Miscellaneous

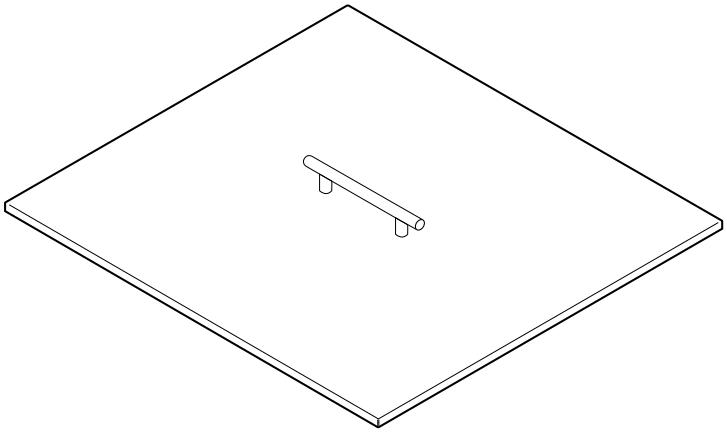

Product Description
SC: Stainless 304 sink covers with handles to match that on cabinets, can be powder coated to match cabinets. Custom sizes available, please contact sales. Example SKUs: SC2116, SC3222, SC4322

Standard Bar Pull Handles

Product Description
All Danver/Brown Jordan Outdoor Kitchens cabinets come drilled and assembled with our standard stainless steel bar pull unless otherwise noted at the time of order.

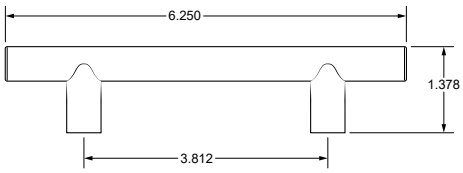

NOTE: For use on 9" cabinets only

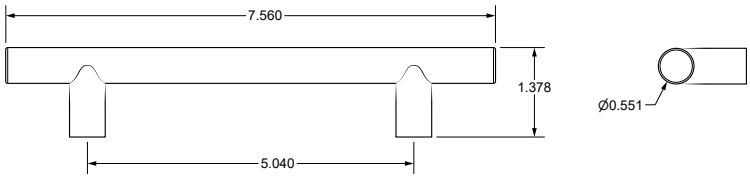

NOTE: Standard size, used on all doors and drawers

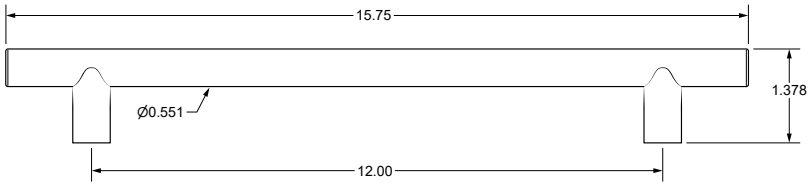

NOTE: For use on appliance overlay panels only

Cabinet Accessories - Feet and Toe Kick

Typical cabinet foot location.

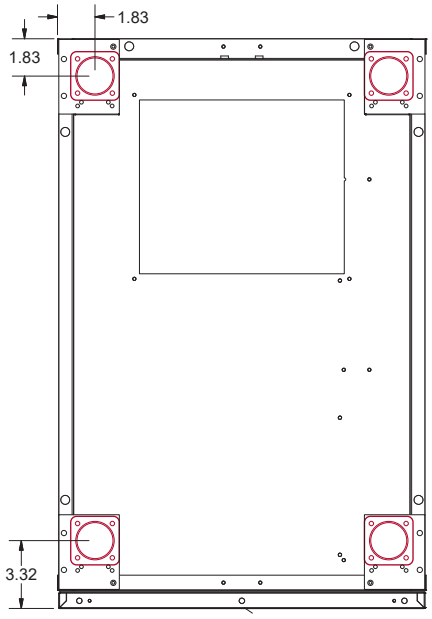

Bottom View

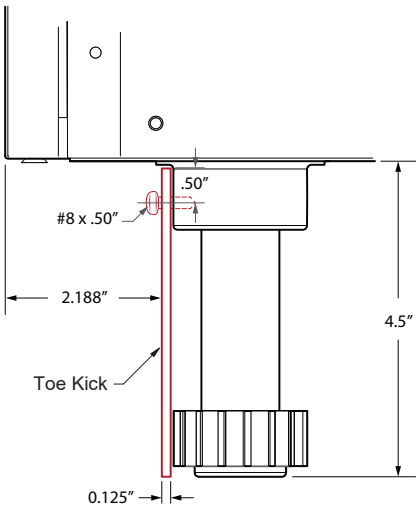

Side View

Our standard cabinetry leg is adjustable from 3.625" to 6.00".

Modification of Standard Legs

In the event that the cabinet needs to sit below our standard minimum leg height, the standard legs can be modified. This modification will allow the legs to be at a reduced height, but still afford the ability for adjustment, ensuring correct leveling of cabinets.

Refer to the Cabinet Installation Instructions for complete information.

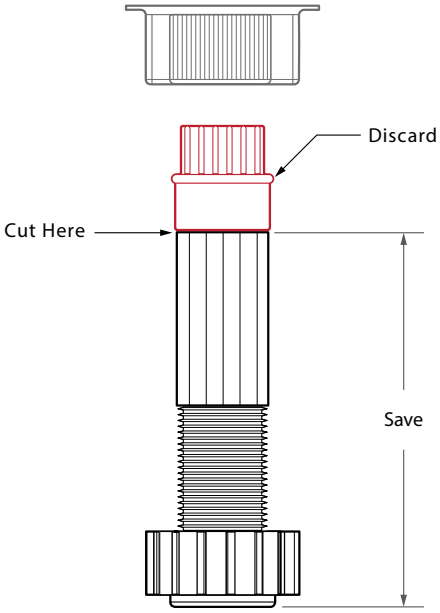

Cabinet Accessories - Feet and Toe Kick

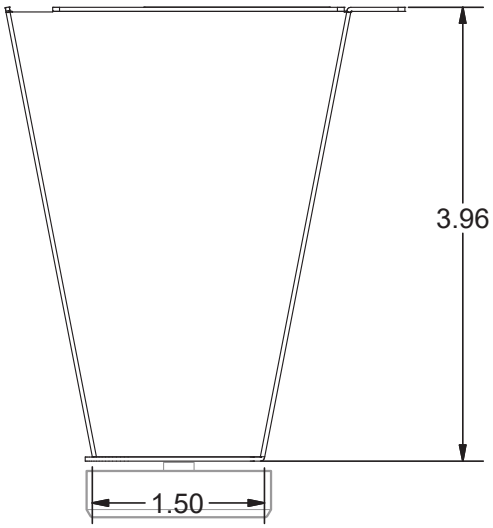

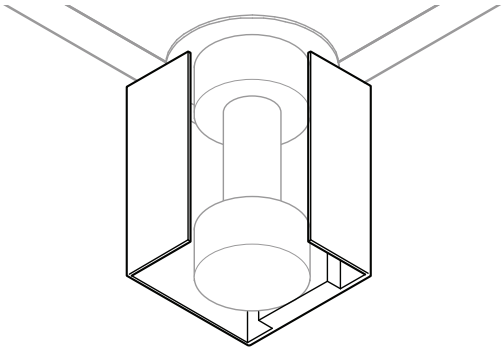

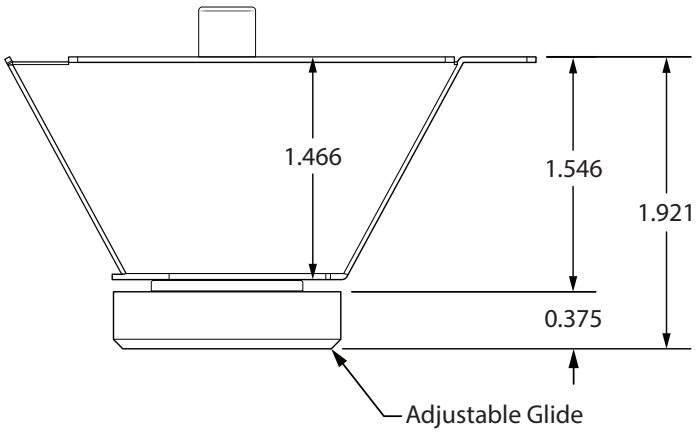

Product Description	
SSLEG options: A wide range of Stainless Steel leg covers are available. ADA compliant leg and wall cabinet leg modifer kits are also available. Stainless legs can be powder coated to match cabinetry.	
SKU	Descriptoin
SSLEG	Exposed 4.5'' high stainless steel tapered leg. Number required based on cabinet sizes, either 4, 6, or 8 (54'' and above). REPLACES LEGS. NOTE: Cannot be used for ORP/OBX units smaller than 3.88''W
SSLEG COVER	Square stainless cover for standard legs where no toe kick preferred. NOTE:Cannot be used for ORP/OBX units smaller than 3.88''W
SSLEG COVER ADJ	Adjustable square stainless steel leg cover: 3'' minimum - 5.62'' maximum height. NOTE: Cannot be used for ORP/OBX units smaller than 3.88''W
SSLEG COVER DOUBLE	Square stainless cover to cover 2 standard legs
ADA SSLEG	Exposed 2'' high stainless steel tapered leg for ADA compliant cabinet. Number required based on cabinet sizes, either 4, 6, or 8 (54'' and above). REPLACES STANDARD LEGS. NOTE: Cannot be used for ORP or OBX units smaller than 3.88''W
WALL LEG KIT	Set of 4 legs and receivers to allow wall cabinet to act as base.
WALL LEG KIT ADA	Set of 4 stainless steel ADA height legs to allow wall cabinet to act as base.

Cabinet Accessories - Feet and Toe Kick

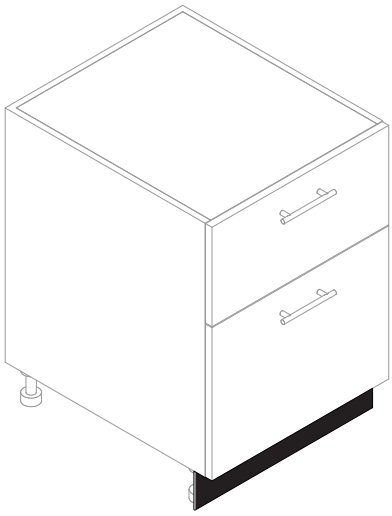

Black Toe Kick

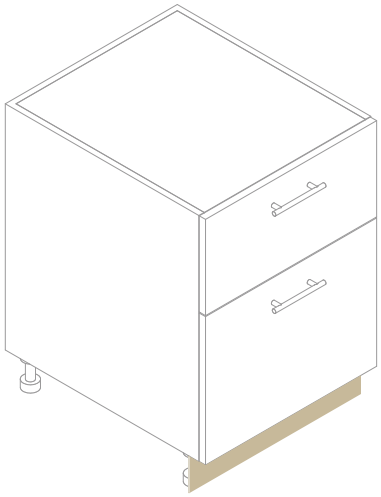

Stainless Steel Toe Kick

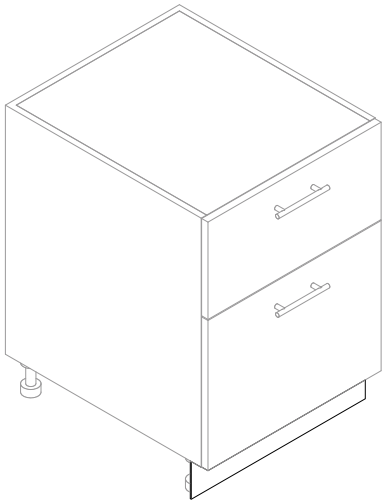

Painted Stainless Steel Toe Kick

Product Description				
Toe Kick: .090” thick Aluminum toe kick is available plain to match stainless or can be powder coated to match cabinetry. NOTE: SHIPPED SEPARATELY VIA FEDEX/UPS GROUND, NOT WITH FREIGHT SHIPMENT!				
Finish	84” Length of Toe Kick	Splice for Connecting Straight Run	45 degree Corner Splace	90 Degree Corner Splice
2” H Black Finish	OTK2	OTK2 SPLICE	OTK2 CORNER 45	OTK2 CORNER 90
2: H Aluminum Finish	OTK2-AL	OTK2-AL SPLICE	OTK2-AL CORNER 45	OTK2-AL CORNER 90
2” H Powder Coated Finish	OTK2-AL PAINTED	OTK2-AL SPLICE PAINTED	OTK2-AL CORNER 45 PAINTED	OTK2-AL CORNER 90 PAINTED
4.38” H Black Finish	OTK4	OTK4 SPLICE	OTK4 CORNER 45	OTK4 CORNER 90
4.38” H Aluminum Finish	OTK4-AL	OTK4-AL SPLICE	OTK4-AL CORNER 45	OTK4-AL CORNER 90
4.38” H Powder Coated Finish	OTK4-AL PAINTED	OTK4-AL SPLICE PAINTED	OTK4-AL CORNER 45 PAINTED	OTK4-AL CORNER 90 PAINTED
6” H Black Finish	OTK6	OTK6 SPLICE	OTK6 CORNER 45	OTK6 CORNER 90
6” H Aluminum Finish	OTK6-AL	OTK6-AL SPLICE	OTK6-AL CORNER 45	OTK6-AL CORNER 90
6” H Powder Coated Finish	OTK6-AL PAINTED	OTK6-AL SPLICE PAINTED	OTK6-AL CORNER 45 PAINTED	OTK6-AL CORNER 90 PAINTED

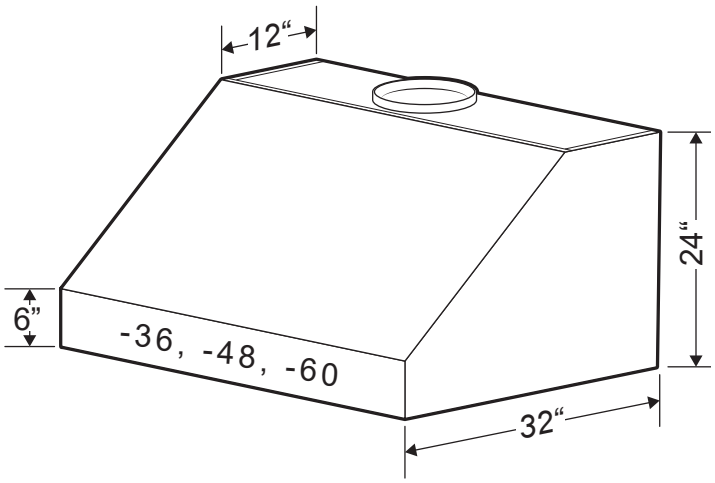

Product Description
DOHC: 32″ depth hoods provide an exceptional capture area for BBQ grilling. Available in 3 sizes; 36″, 48″ and 60″ wide. Hoods feature two internal sealed motors that deliver 1200 CFM, Four - 12″ x 15″ baffle filters improve performance (six filters on 48″, eight filter on 60″). Optional in-line blowers deliver 1266 CFM (10″ diameter ducting) (available separately). Blower Assembly can be purchased separately to be built into custom enclosures, example: DOHC48-Liner. Duct covers available (specify).

SKU	Description
DOHC36	36” 1300 CFM Outdoor Hood, 36”W x 32”D x 24”H, Halogen Lights, 3 speed, includes blower
DOHC42	42’’ 1250 CFM Outdoor Hood, 42’’W x 32’’D x 24’’H, Halogen lights, 3 speed, includes blower
DOHC48	48” 1300 CFM Outdoor Hood, 36”W x 32”D x 24”H, Halogen Lights, 3 speed, includes blower
DOHC54	54’’ 2300 CFM Outdoor Hood, 54’’W x 32’’D x 24’’H, Halogen lights, 3 speed, includes blower
DOHC60	60” 1300 CFM Outdoor Hood, 36”W x 32”D x 24”H, Halogen Lights, 3 speed, includes blower
DOHC66	66’’ 2300 CFM Outdoor Hood, 66’’W x 32’’D x 24’’H, Halogen lights, 3 speed, includes blower
DOHC72	72’’ HOOD S727223CD
Inline Blower	1266 CFM inline blower to replace internal blowers
Duct Silencer	36” duct silencer for 10” duct work (for inline blower only)

Elements by Tecno™

All Elements by Tecno Base cabinets and accessories use specific nomenclature designed to help you find the specific type needed.

All Elements cabinet and asseccories are designated with the prefix ELEM.

Specify right or left hinge on doors where needed.

Base Cabinet part number nomenclature; example:						
ELEM OBF1801-RH: 18″ Full Height Door Cabinet						
ELEM	**OB**	**F**	**18**	**0**	**1**	**RH**
Prefix	**Base**	**Style**	**Width**	**Drawers**	**Doors**	**Hinge**
Designates Elements products	Category *	Base Style**	Base Width in inches	Number of Drawers	Number of Doors	Left or Right Hand

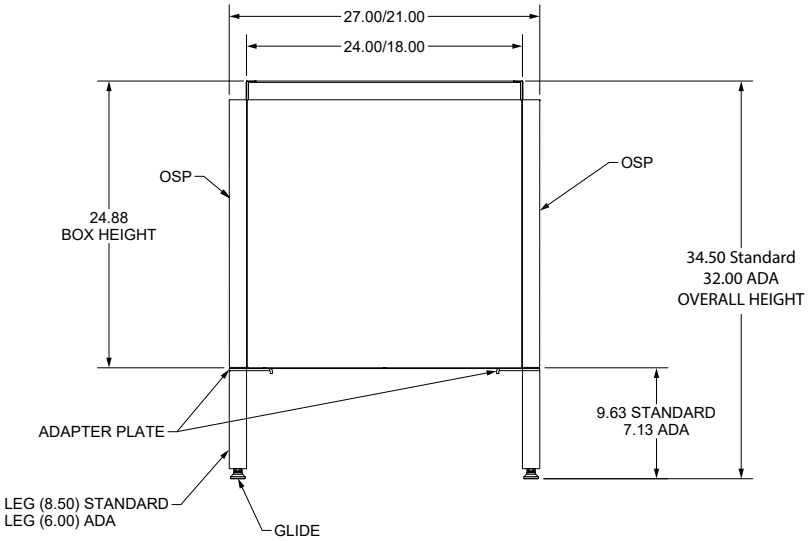

FRONT VIEW

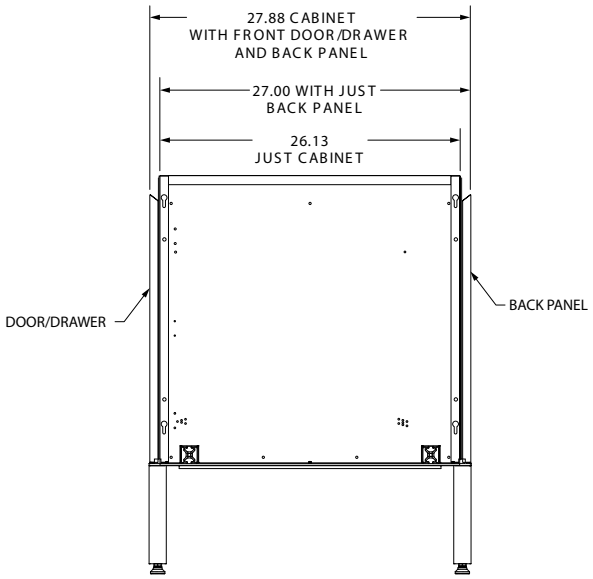

SIDE VIEW

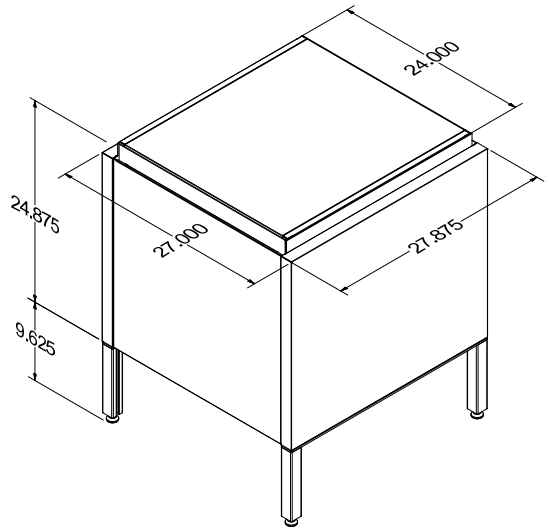

ELEM OBF

Product Description
ELEM OBF: ELEMENTS Full-Height door cabinet. Includes adjustable half depth shelf.
SKU
ELEM OBF1801-LH
ELEM OBF1801-RH
ELEM OBF2401-LH
ELEM OBF2401-RH

Product Description
ELEM OBG: Garage Cabinet
SKU
ELEM OBG1800
ELEM OBG2400

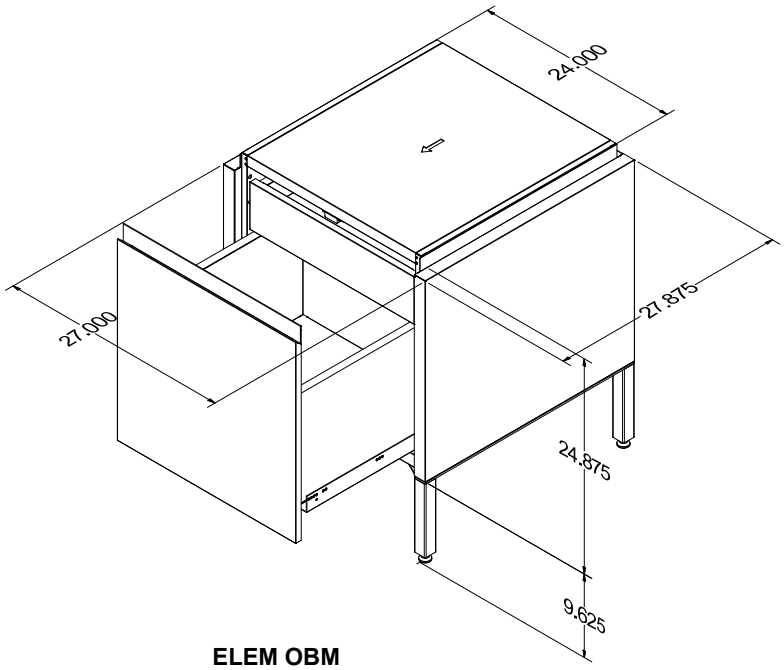

ELEM OBM

Product Description
ELEM OBM: Multi-Drawer Cabinet
SKU
ELEM OBM1820
ELEM OBM2420

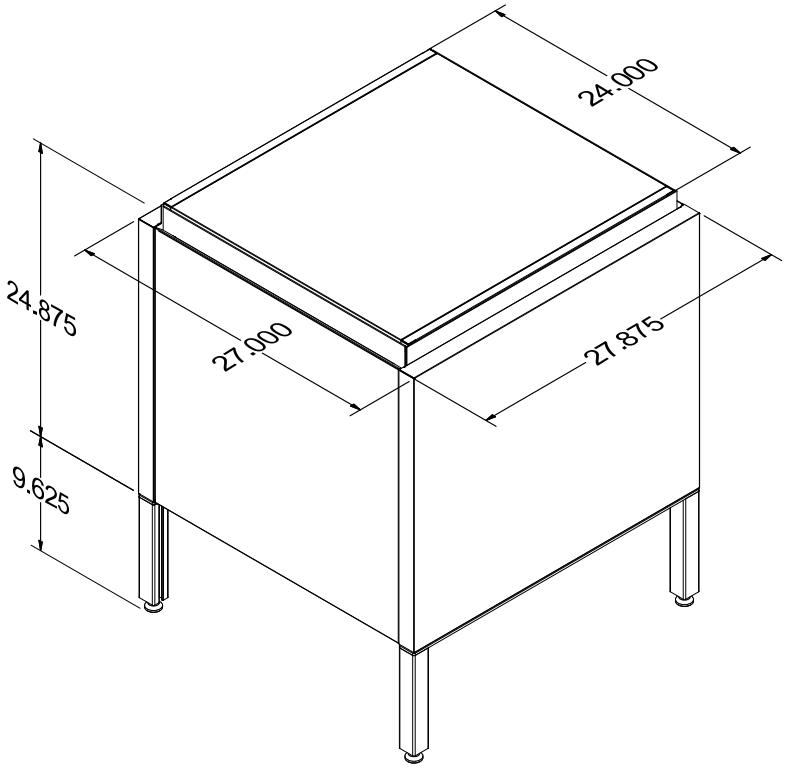

ELEM OBPT

Product Description
ELEM OBPT: Passthru Cabinet. Includes fixed half depth shelf.
SKU
ELEM OBPT1802-LH-LH
ELEM OBPT1802-LH-RH
ELEM OBPT1802-RH-RH
ELEM OBPT1802-RH-LH
ELEM OBPT2402-LH-LH
ELEM OBPT2402-LH-RH
ELEM OBPT2402-RH-RH
ELEM OBPT2402-RH-LH

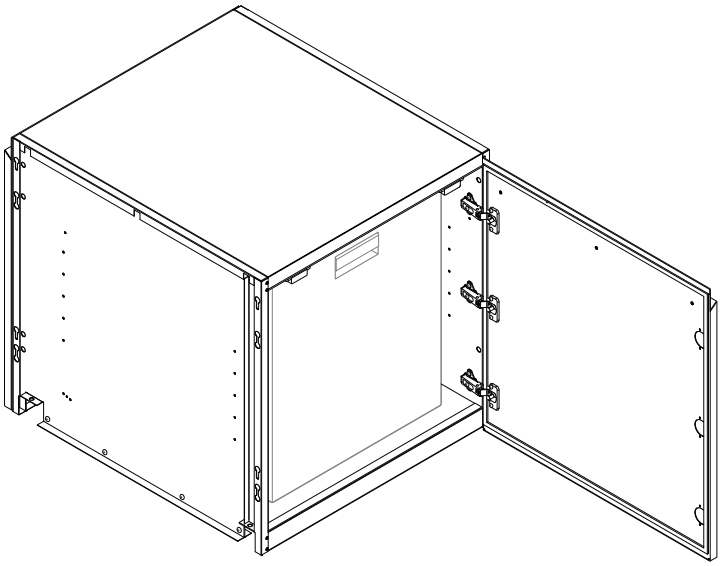

NOTE: ELEM OBR2401 shown with the ELEM VIT installed.

Product Description
ELEM OBR: Refrigerator Cabinet with 1 full height door.
SKU
ELEM OBR2401-LH
ELEM OBR2401-RH

SKU	Description
ELEM VIT	24’ Vitrifigo undercounter refrigerator model#C62IXDF-F

Elements by Tecno™

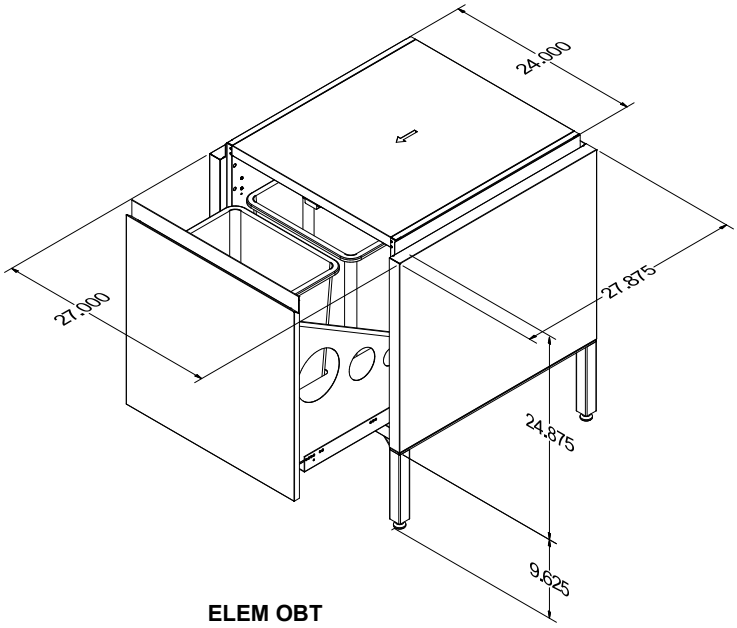

ELEM OBT

Product Description
ELEM OBT: ELEMENTS Trash cabinet. 1 Full-Height Door attached to Trash Pull mechanism.
SKU
ELEM OBT1800
ELEM OBT2400

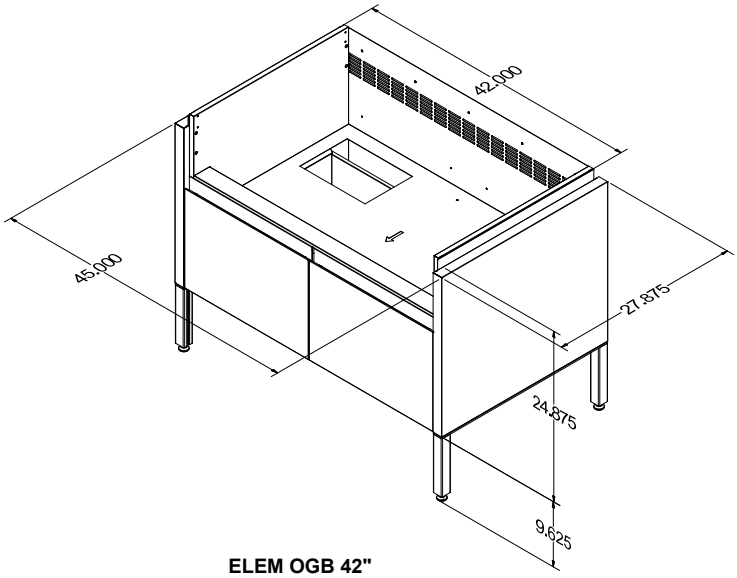

ELEM OGB 42"

Product Description
ELEM OGB: Grill Cabinet
SKU
ELEM OGB4220
ELEM OGB4220-CALIBER ROCKWELL*
ELEM OGB4820
ELEM OGB4820-CALIBER ROCKWELL*
*NOTE: This cabinet can only be used on the end of a run if using 42"W Caliber Rockwell grill, please call sales rep to discuss

Product Description
ELEM OBS: Sink Cabinet with full height door.
SKU
ELEM OBS1801-FHD-LH
ELEM OBS1801-FHD-RH
ELEM OBS2401-FHD-LH
ELEM OBS2401-FHD-RH

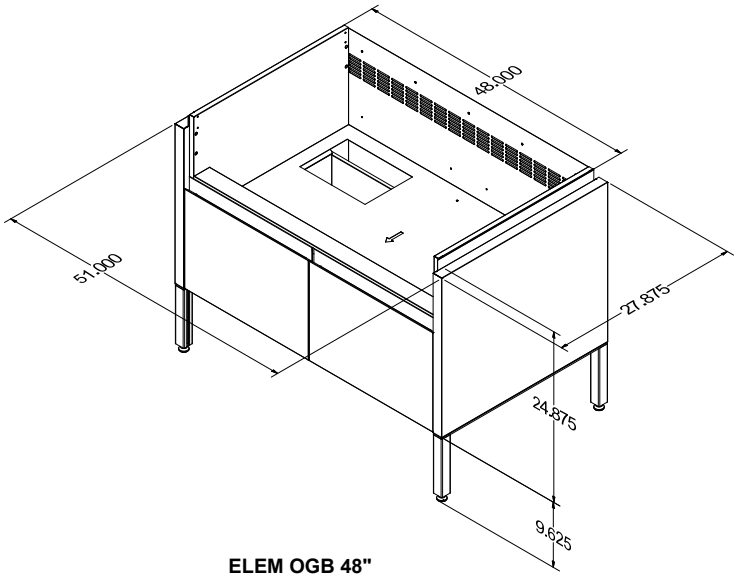

ELEM OGB 48"

SKU	Description
ELEM TRANSITION	1.5625" Thick with matching reveal, includes 2 legs and adapter plate, used for connecting two runs of Elements cabinets (segments of cabinet runs cannot be more than 72"W), *legs/leg covers will be same color as cabinets unless otherwise specified*, 3" leg covers included to cover glides if desired

Product Description
ELEM OSP: installs on Elements OBF, OBM, OGB, OBT, OBS, and OBR cabinets*, includes set of 2 legs and adapter plate, 3” leg covers included to cover glides if desired, **legs/leg covers will be same color as cabinet fronts unless otherwise specified**
SKU
ELEM OSP L-R

Product Description
ELEM OSP OBG: Garage Cabinet End Caps
SKU
ELEM OSP L OBG
ELEM OSP R OBG

Product Description
ELEM OSP OCS: installs on Elements OBF, OBM, OGB, OBT, OBS, and OBR cabinets WITH CUTOUTS FOR EXTRUSIONS*, includes set of 2 legs and adapter plate, 3” leg covers included to cover glides if desired, **legs/leg covers will be same color as cabinet fronts unless otherwise specified**
SKU
ELEM OSP L-R OCS

Product Description	
ELEM OCS: Elements Countertop Support Consists of 3 aluminum extrusions with considerable stiffness. **While the span extrusions are extremely strong, our company does not warrant the spans to keep countertops from cracking, especially if mistreated during use. Your fabricator/installer must make the final call if there are any questions on stability across the span.**	
SKU	Description
ELEM OCS30	Countertop support, same as standard OCS30 part
ELEM OCS33	Countertop support, same as standard OCS33 part
ELEM OCS36	Countertop support, same as standard OCS36 part
ELEM OCS39	Countertop support, same as standard OCS39 part
ELEM OCS42	Countertop support, same as standard OCS42 part
ELEM OCS45	Countertop support, same as standard OCS45 part
ELEM OCS48	Countertop support, same as standard OCS48 part

Wall Cabinets

- Available in 3″ increments from 12″ to 48″ wide.
- Standard heights range from 15″ to 42″.
- The outside dimension is 13″ (13.88″ including door).
- Two doors are furnished with cabinets from 24″ to 48″ in width.
- Every wall cabinet comes with:
  - top and bottom finished panels
  - standard stainless bar pulls
- The wall cabinet line includes diagonal corner and blind corner wall cabinet options.
- Finished side panels are optional and are available in two configurations:
  - Flush to the cabinet side or .75″ thick panel flush to the face of the door. Doors may be ordered in different styles or open for glass (OFG).
  - Wall cabinetry may also be fitted with standard or stainless legs and used as shallow depth base cabinets.
- Includes 1-3 shelves, depending on the height of the cabinets.
- Specify left or right hinge on all single door cabinets.

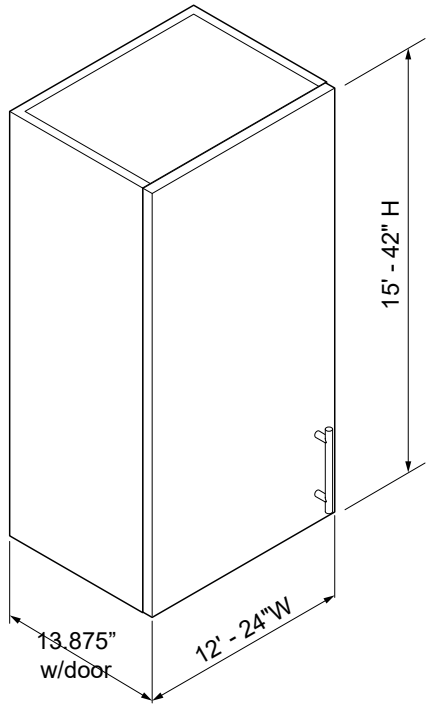

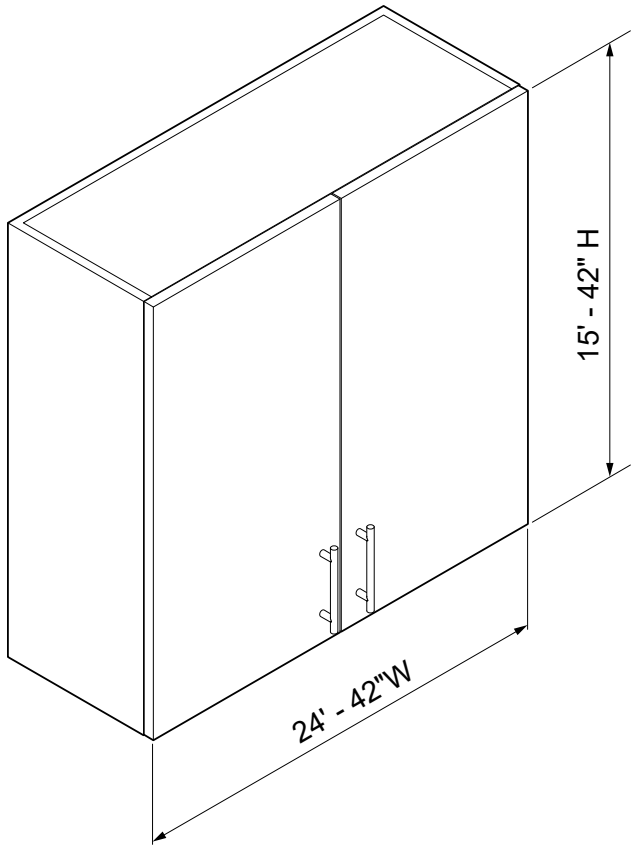

Wall Cabinet Nomenclature

All Danver Base cabinets use specific nomenclature designed to help you find the specific type needed.

Standard base cabinet depth is 27".

For 24" depth cabinets, specify -24 after item #. For example WS2421-24.

Specify right or left hinge on single door sizes.

Single Door Wall Cabinet part number nomenclature; example:			
WS1821-RH: 18" Single Door Cabinet			
WS	**18**	**21**	**RH**
Style	**Width**	**Height**	**Hinge**
Style	Cabinet Width in inches	Cabinet Height in inches	Left or Right Hand

Double Door Wall Cabinet part number nomenclature; example:		
WS3636: 36" Double Door Cabinet		
WS	**36**	**36**
Style	**Width**	**Height**
Style	Cabinet Width in inches	Cabinet Height in inches

Wall Cabinets

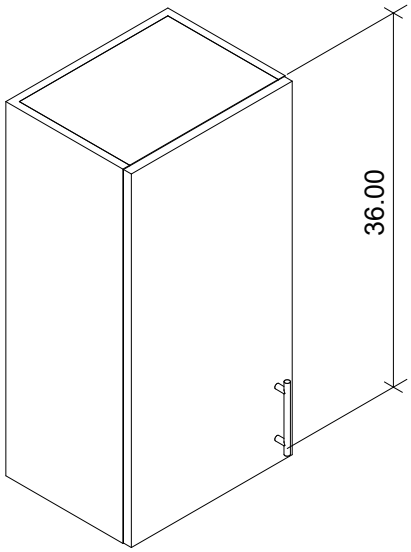

Product Description	
WS: Single Door Wall Cabinets	
15” Height SKU	18” Height SKU
WS1215-LH	WS1218-LH
WS1215-RH	WS1218-RH
WS1515-LH	WS1518-LH
WS1515-RH	WS1518-RH
WS1815-LH	WS1818-LH
WS1815-RH	WS1818-RH
WS2115-LH	WS2118-LH
WS2115-RH	WS2118-RH
21” Height SKU	24” Height SKU
WS1221-LH	WS1224-LH
WS1221-RH	WS1224-RH
WS1521-LH	WS1524-LH
WS1521-RH	WS1524-RH
WS1821-LH	WS1824-LH
WS1821-RH	WS1824-RH
WS2121-LH	WS2124-LH
WS2121-RH	WS2124-RH
30” Height SKU	36” Height SKU
WS1230-LH	WS1236-LH
WS1230-RH	WS1236-RH
WS1530-LH	WS1536-LH
WS1530-RH	WS1536-RH
WS1830-LH	WS1830-LH
WS1830-RH	WS1830-RH
WS2130-LH	WS2136-LH
WS2130-RH	WS2136-RH
39” Height SKU	42” Height SKU
WS1239-LH	WS1242-LH
WS1239-RH	WS1242-RH
WS1539-LH	WS1542-LH
WS1539-RH	WS1542-RH
WS1839-LH	WS1842-LH
WS1839-RH	WS1842-RH
WS2139-LH	WS2142-LH
WS2139-RH	WS2142-RH
WS2439-LH	WS2442-LH
WS2439-RH	WS2442-RH

Wall Cabinets

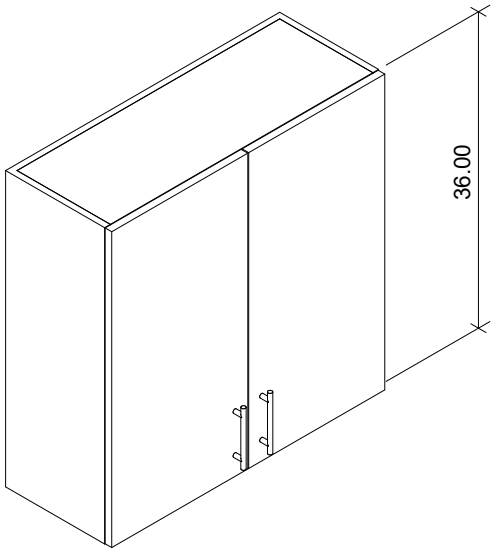

Product Description	
WS: Double Door Wall Cabinets	
12” Height SKU	
WS3612	
15” Height SKU	18” Height SKU
WS2415	WS2418
WS2715	WS2718
WS3015	WS3018
WS3315	WS3318
WS3615	WS3618
WS3915	WS3918
WS4215	WS4218
21” Height SKU	24” Height SKU
WS2421	WS2424
WS2721	WS2724
WS3021	WS3024
WS3321	WS3324
WS3621	WS3624
WS3921	WS3924
WS4221	WS4224
30” Height SKU	36” Height SKU
WS2430	WS2436
WS2730	WS2736
WS3030	WS3036
WS3330	WS3336
WS3630	WS3636
WS3930	WS3936
WS4230	WS4236
39” Height SKU	42” Height SKU
WS2439	WS2442
WS2739	WS2742
WS3039	WS3042
WS3339	WS3342
WS3639	WS3642
WS3939	WS3942
WS4239	WS4242
WS4539	WS4842
WS4839	N/A

Wall Cabinets

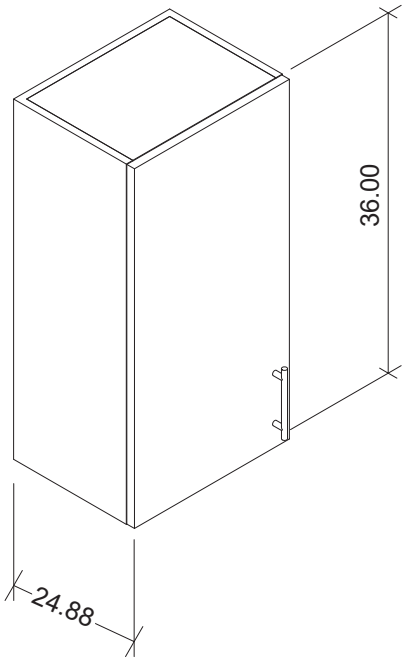

Product Description	
WS: 24” DEEP Double Door Wall Cabinets	
12” Height SKU	
WS2412-24	
WS3012-24	
WS3612-24	
15” Height SKU	18” Height SKU
WS1515-24	WS1518-24
WS3315-24	WS3318-24
WS3615-24	WS3018-24
21” Height SKU	24” Height SKU
WS2421-24	WS1224-24
WS3323-24	WS3324-24
WS3621-24	WS3524-24
30” Height SKU	36” Height SKU
WS2430-24	WS2436-24
39” Height SKU	42” Height SKU
WS3039-24	WS3042-24

Wall Cabinets

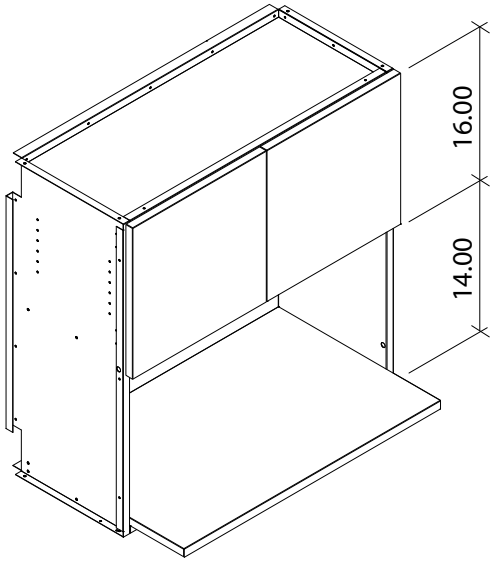

Product Description	
MWC: Microwave Wall Cabinets	
30” Height SKU	
MWC2730	
MWC3030	
MWC3042-24	
36” Height SKU	42” Height SKU
MWC3736	MWC2742
MWC3036	MWC3042

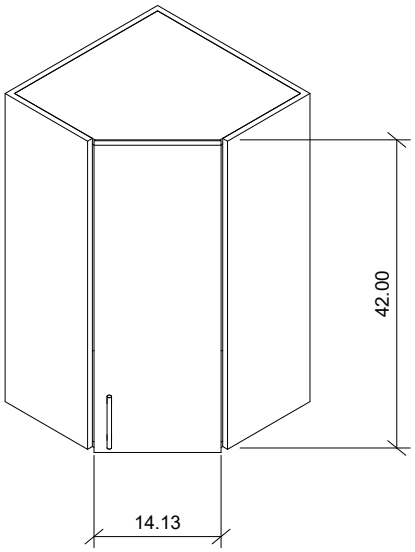

Product Description
DCW: Diagonal Wall Cabinets
SKU
DCW15-LH
DCW15-RH
DCW18-LH
DCW18-RH
DCW21-LH
DCW21-RH
DCW24-LH
DCW24-RH
DCW30-LH
DCW30-RH
DCW36-LH
DCW36-RH
DCW42-LH
DCW42-RH

Wall Cabinets

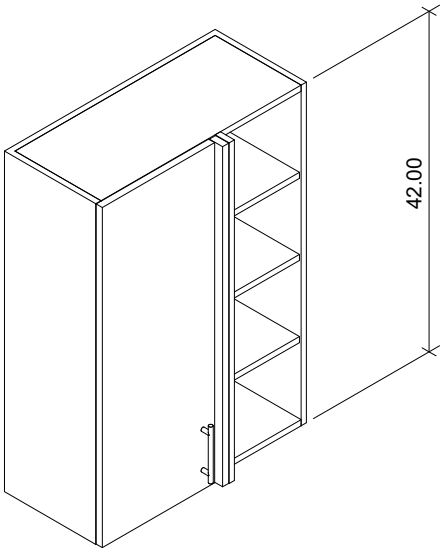

Product Description	
WB: Blind Corner Wall Cabinets	
24” Height SKU	30” Height SKU
WB2724-LH	WB2730-LH
WB2724-RH	WB2730-RH
WB3024-LH	WB3030-LH
WB3024-RH	WB3030-RH
36” Height SKU	42” Height SKU
WB2736-LH	WB2742-LH
WB2736-RH	WB2742-RH
WB3036-LH	WB3042-LH
WB3036-RH	WB3042-RH

Wall Cabinets - Accessories

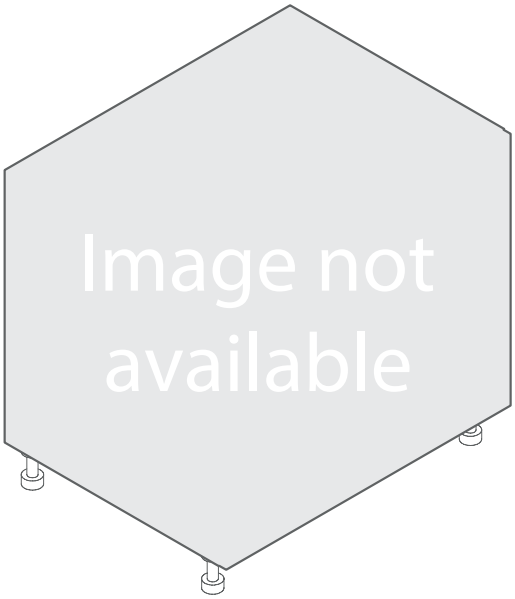

Product Description
WSP: ¾” Thick side panels for wall cabinets. 13.88”W, panels sit flush with door/drawer faces. Specify based on cabinet side and height. Example SKUs: WSP15L, WSP24R, WSP36L, WSP42R

Product Description
WFE: Flush side panels for wall cabinets. 13”W, panels sit flush with cabinet box. Specify based on cabinet side and height. Example SKUs: WFE18L, WFE21R, WFE33L, WFE39R

Product Description
WFL: Wall cabinet front filler, sits flush with door faces, attaches between two wall cabinets. Use this filler when using a wall cabinet as a base cabinet with the addition of a Wall Leg Kit. 1”W minimum, available in 1/8” increments as needed.

Wall Cabinet Front Filler Nomenclature		
Example: WFL 30 3.75		
WFL	XX	XX
Prefix	**Width**	**Height**

Example SKUs: WFE18L, WFE21R, WFE33L, WFE39R

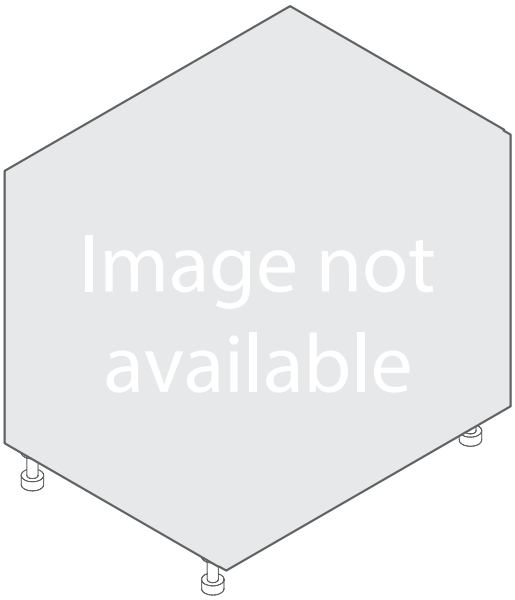

Product Description
WFC: Wall cabinet front 90-degree corner filler, sits flush with door faces, attaches between two wall cabinets. 2”W overall, 1”W minimum on each side of bend, available in 1/8” increments as needed.

Wall Cabinet Front Filler Nomenclature			
Example: WFC 24 3.63 2.00			
WFC	XX	XX	XX
Prefix	**Height**	**Left Dim.**	**Right Dim.**

Example SKUs: WFC 18 4.00 4.00, WFC 36 3.50 3.00

Product Description
PVC Cleat: Required cleat for hanging wall cabinets. Comes in 60” x 3”H lengths, cut onsite as needed.

Wall Cabinets - Accessories

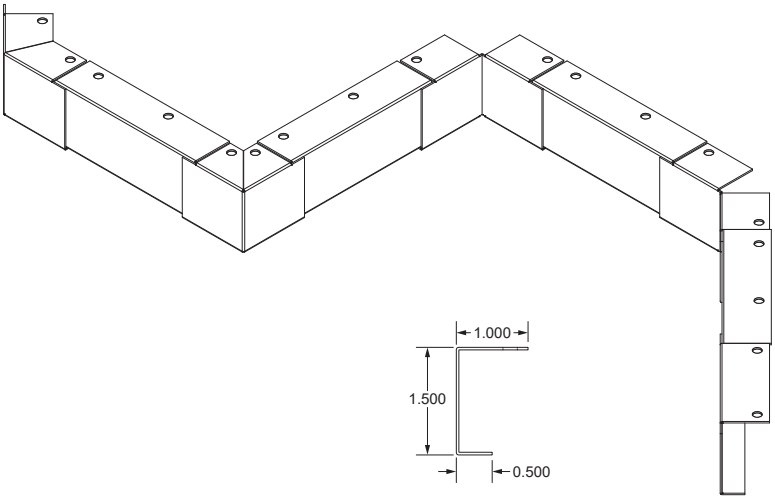

Product Description
Light Rail – Stainless light rail for wall cabinets. Comes in 84” lengths, cut onsite as needed. Can be powder coated to match cabinets.

SKU		
Light Rail	1.5”H	3.0”H
	LR STRAIGHT 1.5	LR STRAIGHT 3.0
90-degree inside corner	LR 90 IN 1.5	LR 90 in 3.0
90-degree outside corner	LR 90 OUT 1.5	LR 90 OUT 3.0
135-degree inside corner	LR 135 IN 1.5	LR 135 IN 3.0
135-degree outside corner	LR 135 OUT 1.5	LR 135 OUT IN 3.0
Straight Splice	LR SPLICE 1.5	LR SPLICE 3.0

Island Insert Cabinets

Designers and builders of masonry island kitchens are now offered a complete line of door, drawer/door, drawer combinations and pullout cabinetry to construct a totally functional kitchen. The line features the optional Clean-Stor® box that attaches to door fronts to create useful storage and organization. The Clean-Stor box eliminates the infamous "masonry black hole" that lurks behind access doors. The steel construction is superior to presently used insert materials that are subject to warping, rotting and mildew. The Clean-Stor box comes with a shelf and provides clean dry storage.
Doors exhibit the same stainless quality, "heft & weight" and solid close as the modular cabinetry line allowing additional design flexibility by using both lines to create the ideal kitchen while retaining a consistent "look". Door and drawer faces can be upgraded to any door style and be powder coated to compliment your outdoor kitchen.

The insert line includes:

- One and Two Drawer Units
- Door and Drawer Combination Units
- One and Two Door (and frame) Units
- Paper Towel Dispenser
- Trash and Propane Pullouts

Access Door Inserts may be purchased with just the frame and doors or combined with the "Clean-Stor" box as a complete unit.

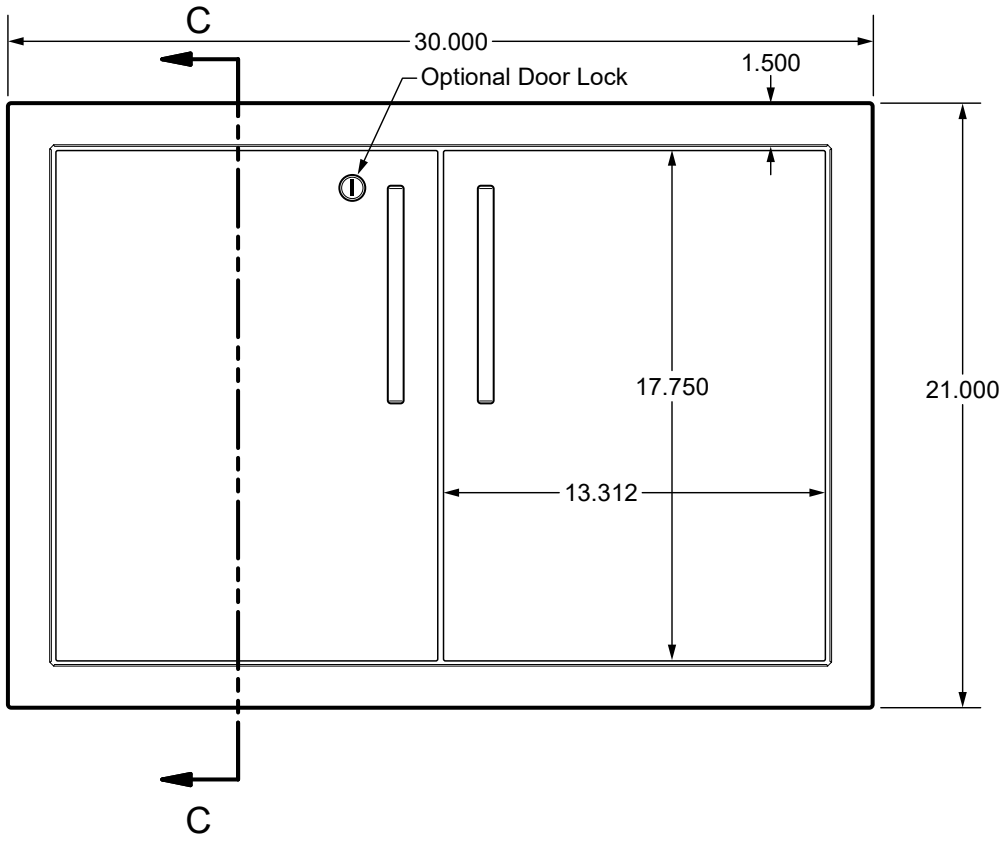

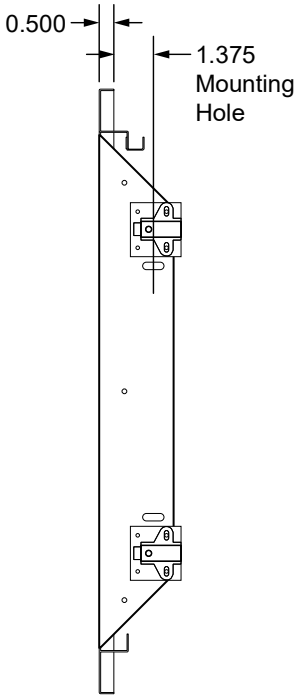

SECTION C-C

Island Insert Cabinets - Access Door

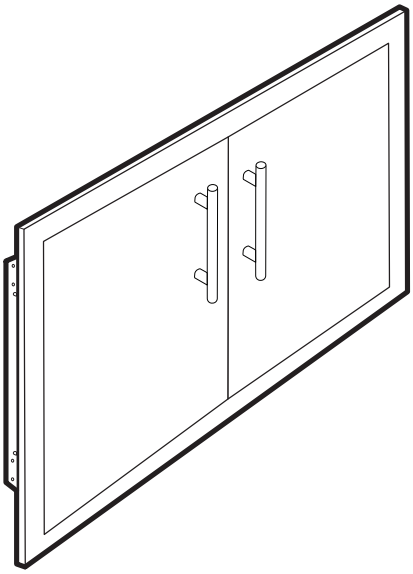

Product Description		
IDR: Access Door		
SKU		
SKU	Description	Cut Out Size
IDR1621-1	16”W x 21”H Frame, One Flush Access Door	13⅝”W x 19½”H
IDR1725-1	17”W x 25”H Frame, One Flush Access Door	14⅝”W x 23½”H
IDR2121-1	21”W x 21”H Frame, One Flush Access Door	18⅝”W x 19½”H
IDR2721-2	27”W x 21”H Frame, Two Flush Access Doors	24⅝”W x 19½”H
IDR3021-2	30”W x 21”H Frame, Two Flush Access Doors	27⅝”W x 19½”H
IDR3025-2	30”W x 25”H Frame, Two Flush Access Doors	27⅝”W x 23½”H
IDR3621-2	36”W x 21”H Frame, Two Flush Access Doors	33⅝”W x 19½”H
IDR4221-2	42”W x 21”H Frame, Two Flush Access Doors	39⅝”W x 19½”H

Island Insert Cabinets - Clean-Stor® Box with Shelf

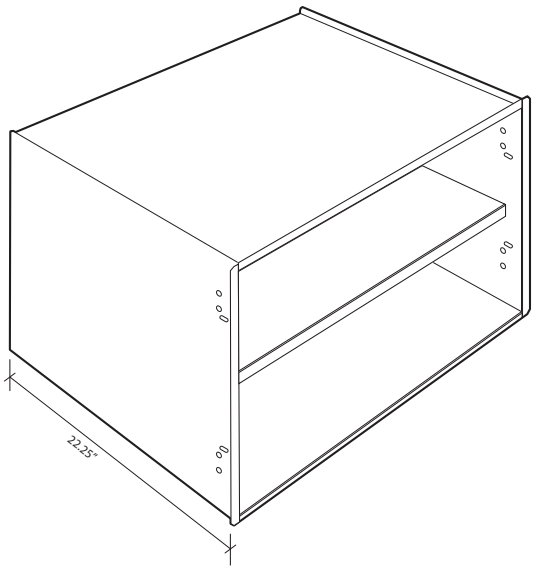

Product Description	
Galvanized Storage Box to install behind frame (order at the same time as Access Doors). NOTE: All Clean-Stor® boxes are 22¼" Deep	
24" Depth SKU	**Description**
IDR1621-B	Clean-Stor® storage box for IDR1621
IDR1725-B	Clean-Stor® storage box for IDR1725
IDR2121-B	Clean-Stor® storage box for IDR2121
IDR2721-B	Clean-Stor® storage box for IDR2721
IDR3021-B	Clean-Stor® storage box for IDR3021
IDR3025-B	Clean-Stor® storage box for IDR3025
IDR3621-B	Clean-Stor® storage box for IDR3621
IDR4221-B	Clean-Stor® storage box for IDR4221

Island Insert Cabinets - Clean-Stor® Box Drawer Sets

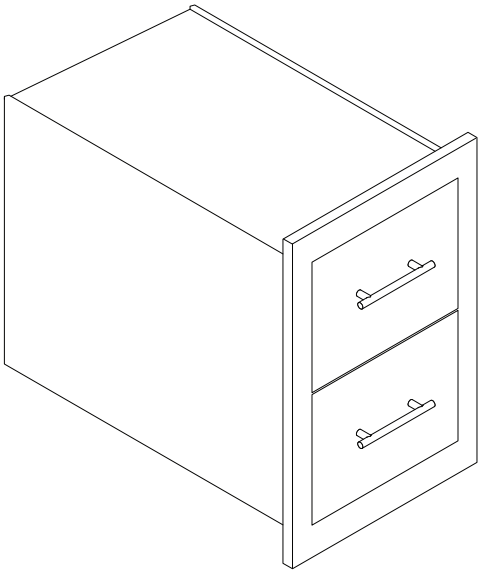

Product Description		
IDW: Drawer Sets		
SKU		
SKU	Description	Cut Out Size
IDW1621-2	16”W x 21”H Frame, Two Drawers w/box	13⅝”W x 19½”H
IDW1630-3	16”W x 30”H Frame, Two Drawers w/box	13⅝”W x 28½”H

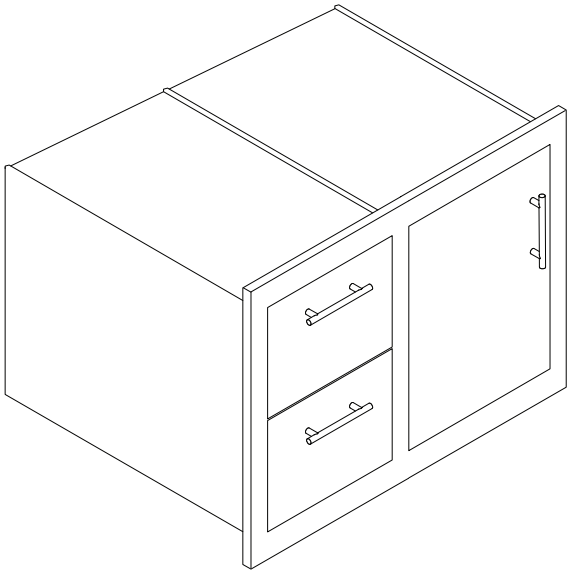

Product Description		
IC: Door and Drawer Sets		
SKU		
SKU	Description	Cut Out Size
IC3021-21	30”W x 21”H Frame, Two Drawers, One door, 2 Separate boxes. Specifiy drawers on left or right of door.	27⅝”W x 19½”H

Island Insert Cabinets - Accessories

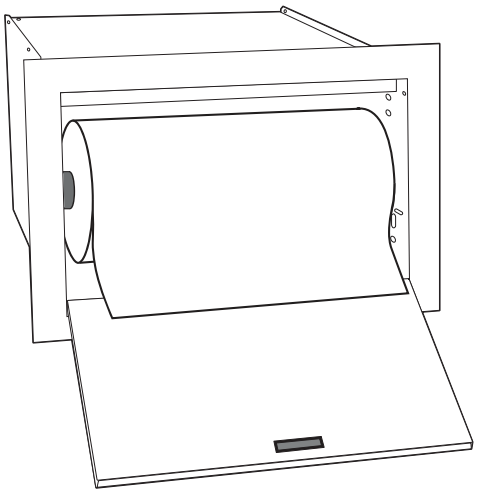

Product Description		
Insert: Accessories		
SKU		
SKU	Description	Cut Out Size
ITR1725	Frame with Trash Pull Out	14⅝”W x 23½”H
IPR1725	Frame with Propane Pull Out	14⅝”W x 23½”H
IPT1711	Paper Towel Dispenser	15½”W x 8⅝”H

Cabinet Door Styles - Danver

The stainless steel cabinetry, doors and drawers provide functional strength and durability, while the extensive color palettes, realistic wood grain powder coat finishes bring style, color and design to what was once a drab space.

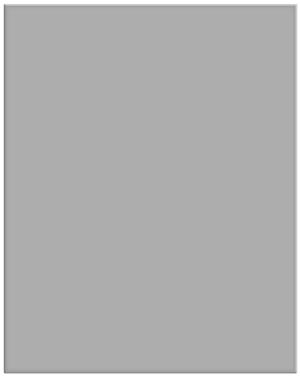

Hampton

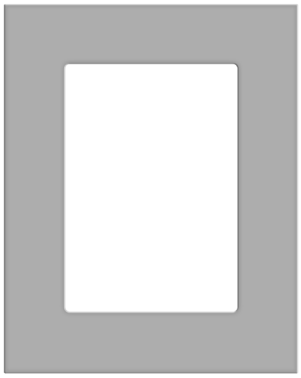

Rio

Key West

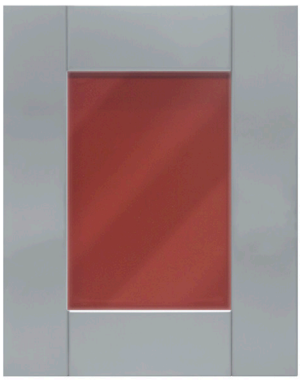

Key West Frost

Key West Sea Glass

Cabinet Door Styles - Brown Jordan Outdoor Kitchens

BeadBoard

Louver

Palm Beach

Key West

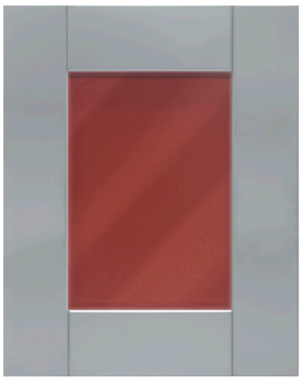

Key West Frost

Key West Sea Glass

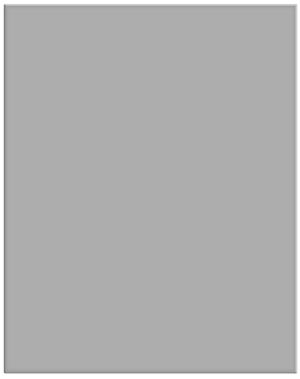

Hampton

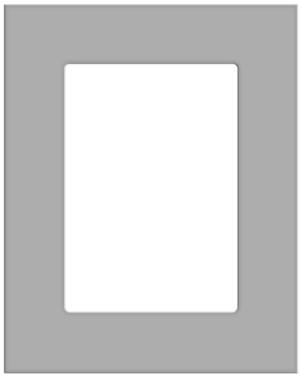

Rio

Tecno

Cabinet Door Styles - Trex Outdoor Kitchens

London

Newport

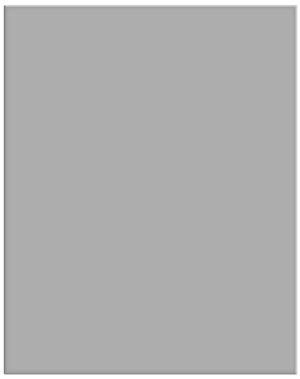

Hampton

Key West

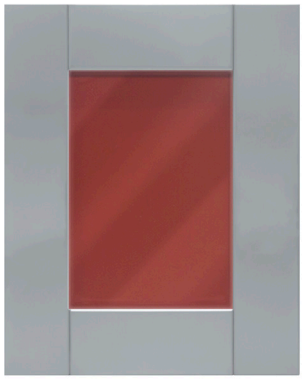

Key West Frost

Key West Sea Glass

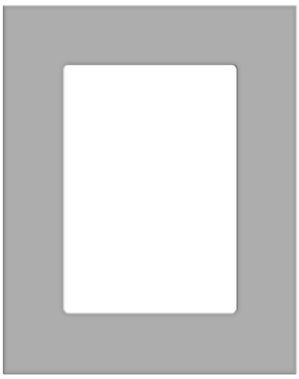

Rio

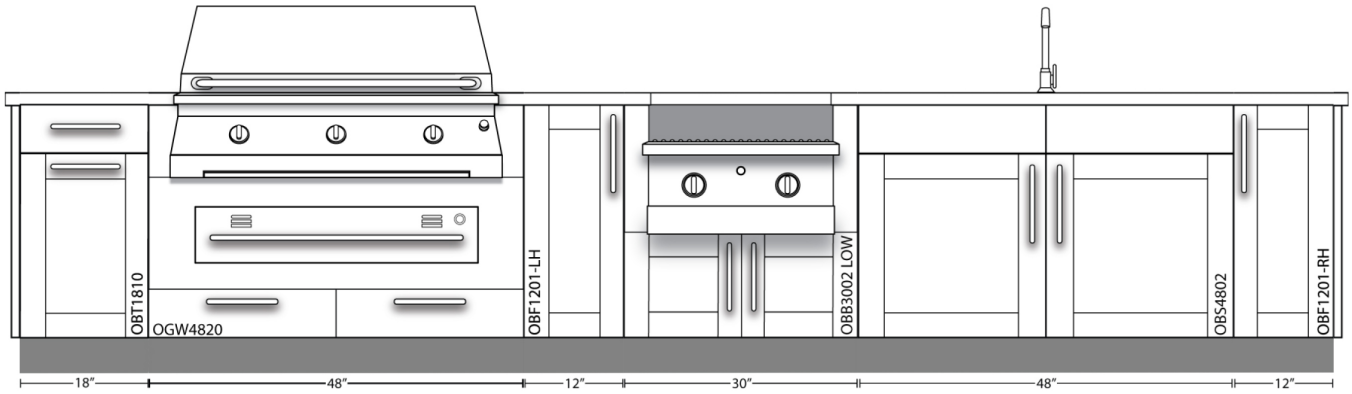

1 Grand Street, Wallingford, CT 06492
Danver.com • BrownJordanOutdoorKitchens.com • Trex-OutdoorKitchens.com