DANVER STAINLESS OUTDOOR KITCHENS™

Trex® Outdoor Kitchens™

BROWN JORDAN® OUTDOOR KITCHENS™

Specification Guide: Outdoor Kitchen Cabinets

Revision: 4-20-2022

Table of Contents

Style and Construction 10

Corner Base Cabinets 12

Angle End: AEBxx02 12

Blind Corner Base: BCBxx01 13

Blind Corner Base: BCBxx11 14

Diagonal Corner: DCBxx, DCBSxx 15

Storage Base Cabinets 16

Drawer/Door Base: OBDxx11, OBDxx12 17

Full-Height Doors: OBFxx01, OBFxx02 18

Open Base Cabinet: OBFxx00 19

Insert Cabinets: OBIxx10 and OBI4200 20

Multi-Drawer: OBMxx10 and OBMxx20 21

Multi-Drawer: OBMxx30 and OBMxx40 22

Multi-Drawer Tecno, Nested 23

Sink Base Cabinets 24

False Front: OBSxx01, OBSxx02 25

Full-Height Door: OBSxxxx-FHD 26

Farm Sink Bases 27

Galley Sink Bases 28

OBSxx00 ADA 29

ADA Sink Space 30

Table of Contents

Trash Base Cabinets 32

OBTxx00, OBTxx10 32

OBTxx10N (nested), OBTxx10N TECNO 33

Large 51 Quart Can: OBTxx00L 34

Post and Panel System 35

PPS SUPPORT MID, END 35

PPS SPACER 36

Side Burner Base Cabinets 37

OBBxxxx: 1 Door, 2 Door, 2 Drawer 38

11"H Shelf: OBBxxxxD 39

12.5"H Shelf: OBBxx01W, OBBxx02W 40

15.5"H Shelf: OBBxx01 LOW, OBBxx02 LOW 41

Bartending Center Cabinets 42

OBCxx01 and OBCxx02 42

11"H Shelf: OBCxx01D, OBCxx02D 43

Warming Drawer Bases 44

OBWxx02, OBWxx10 44

Warming Drawer Bases 45

OBWxx10 DCS 45

OBWxx02D, OBWxx10D 46

Table of Contents

Egg Base Cabinets 47

OEBxx02 H16.5, OEBxx02 H12.5 47

Extra Large, Diagonal Corner: DCBxx 48

Grill Cabinets 49

Grill Cabinets - OGBxxxx 49

Doors: OGBxx02, OGBxx03 50

Drawers/Doors: OGBxx21, OGBxx22, OGBxx41 51

Full-Height Drawers: OGBxx20, OGBxx30 52

Drawers: OGBxx40, OGBxx60 53

EVO: OGBxxxx-EVO 54

11"H Shelf: OGBxx02D, OGBxx03D 55

11"H Shelf: OGBxx40D, OGBxx60D 56

11"H Shelf: Drawers/Doors 57

11"H Shelf: OGBxx20D, OGBxx30D 58

12.5"H Shelf: OGBxx02W, OGBxx03W 59

12.5"H Shelf: OGBxx21W, xx22W, xx41W 62

18.5"H Shelf: OGBxx20HB, OGBxx30HB 63

OGBxx20-CALIBER ROCKWELL 64

Gas Stop Timer: OGBxx00 GS, OGBxx00D GS 65

Tecno Style: OGBxx00P, OGBxx00DP 66

Grill/Large Insert Cabinets 67

OGFxx00 67

Table of Contents

Grill/Warming Drawer Cabinets 68

OGWxx00, OGWxx10 68

OGWxx20, OGWxx30 69

OGWxx01, xx11, xx21 70

11"H Shelf: OGWxxxxD 71

11"H Shelf: Door, Drawers/Door 72

11"H Shelf: 3 Drawers 73

Oven Base Cabinets 74

OOCxx00 74

Viking Grill Cabinets 75

VGBxxxx 75

VGBxx02, VGBxx03 76

Viking Side Burner Bases 77

VBBxx01, VBBxx02 77

Tall Storage Cabinets 78

TBxxxx 78

Full-Height Doors: TBxx84-24-FHD 79

TBxxxx-24: 2 doors 80

TBxxxx-24: 4 doors 81

Tall Oven Cabinets 82

TTxxxx-24: 2 Doors, 2 Drawers 82

Tall Cabinet Accessories - Fillers: TFLF 83

Table of Contents

Side Panels: OSPT xxxxL/R 84

Cabinet Accessories 85

Half and Full-Depth Shelves: OSH 85

Pullout Shelving 86

Pullout Ice Chest 87

Trash Pullout: OTP 88

Propane Pullout: OPPxx 89

Undercounter Appliance Parts 90

Undercounter Appliance Spacers: ORS 91

Countertop Support Columns: ORP/OBX 92

ORP/OBX with electrical cutout 93

ORP/OBX for OCS Countertop Support 94

ORP Decorative Side Panels 95

ORP Depth Skin: ORPS 96

OBX Width Skin: OBXF 96

Corner Void Support System: OAR90xx 97

OAR90XX Access 98

Front Corner Fillers: OAF90/45xx 99

Front Fillers: OFLFxx, Rear Fillers: OFL xx 100

Front Fillers: OFLF END XX, OFLA x-x 101

Front/Rear Fillers with GFCI cutout 102

Undercounter Appliance Filler: OFTS xx xx 103

Table of Contents

Access Door Fillers: OFFxx-LH/RH 104

Countertop Support Piers: OCPSxx 105

Countertop Span Support: OCS 106

Countertop Flush Ends: OFE xxL/R OCS 107

Side Panels: OSP xxL/R 108

Extended Side Panels: OSP EXTEND 109

Flush End Panels: OFE xxL/R, OFEGFxx 110

Back Panels: OBP 111

ADA Back Panels 112

Vented Back Panels: OBPV 113

Galvanized Vented Back Panels: OBPVGF 114

Equal Back Panels 115

Extended Equal Back Panels 116

Miscellaneous 117

Powder Coat Wood Grain Direction: Hampton 117

Powder Coat Wood Grain Direction: Key West 118

Standard Handle Placement 119

Handles 120

Pull Tab Handles 121

Appliance Overlay Panels, Locks 122

Sink Covers: SCxxxx 123

Standard Legs 124

Table of Contents

Stainless Legs: SSLEGS, Wall Leg Kit 125

Toe Kick: OTK 126

Floating Shelves 127

Wall Cabinets 129

Single door: WSxxyy-LH/RH 131

Double door: WSxxyy 132

24" Deep: WSxxxx-24 133

Microwave: MWCxxxx 134

Diagonal Corner: DCWxx, Blind Corner: WBxxxx 135

Wall Accessories 136

Side Panels: WSP, Flush End Panels: WFE 136

Front Fillers: WFL, Corner Fillers: WFC 137

Light Rail, PVC Cleat 138

Island Insert Cabinets 139

Access Doors: IDRxxxx-1, IDRxxxx-2 140

Clean-Stor® Box with Shelf 141

Clean-Stor® Box Drawer Sets: IDWxxxx 142

Island Insert Cabinet - Accessories 143

Elements by Tecno™ 144

Powder Coat Guide 145

Side Burner Bases: ELEM OBB 147

Garage Bases, Multi-Drawer Bases 149

Open Bases, Pass-Through Bases 150

Sink Bases, Trash Bases 151

Grill Cabinets 152

Side Panels: ELEM OSP L-R 153

Transition, OCS Countertop Support 154

Cabinet Door Styles - Danver 155

Cabinet Door Styles - Brown Jordan Outdoor Kitchens 156

Cabinet Door Styles - Trex Outdoor Kitchens 158

Style and Construction

- All standard doors, drawers and cabinet boxes are manufactured from 20g 304 stainless steel or choose to upgrade to 316 marine grade.
- European frameless, solid top construction with full overlay doors.
- Standard 30″ high cabinet boxes plus 4.5″ leveling legs adjustable from 3.75″ to 6″ or 2-2.75″ (ADA) leg heights.
- Cabinet depths are standard 27.88″ or optional 24.88″ which includes 7/8" for drawer(s) and door(s).
- Concealed door hinges, full extension, soft-close drawer glides on residential projects.
- Magnetic door closures and rain gaskets are standard on cabinetry.
- #2 matte finish interior standard on Danver Stainless Outdoor Kitchen cabinets.
- #4 brushed finish interior standard on Brown Jordan Outdoor Kitchen cabinets.

Cabinet Options

- Shelving options: half depth standard, full depth, roll out or heavy duty available. Incremental 3″ widths starting at 9″ and heights starting at 12″.
- Available in a variety of door style options.
- Powder coated finishes in solid colors along with woodgrain and stone looks.
- Finished backs and sides are available for stand alone island installations.
- Pre-cut access holes to accommodate plumbing, electrical and required ventilation.

Outdoor Cabinet Nomenclature

All Danver Base cabinets use specific nomenclature designed to help you find the specific type needed.

Standard base cabinet box depth is 27″ (drawers/door fronts are 7/8" thick)

For 24″ depth cabinets, specify -24 after item #. For example OBF1501-24-LH.

Right hinge or left hinge on single door units is specified as -RH or -LH.

Base Cabinet part number nomenclature; example:					
OBF1801-RH: 18″ Full Height Door Cabinet					
OB	**F**	**18**	**0**	**1**	**RH**
Base	**Style**	**Width**	**Drawers**	**Doors**	**Hinge**

Category *

Base Style**

Base Width in inches

Number of Drawers

Number of Doors

Left or Right Hand

* Base Category Code Key	
OB	Outside Base
OG	Outside Grill
OE	Outside Egg
OP	Outside Propane Pull-out
OW	Outside Warming
VG	Viking Grill
DC	Diagonal Corner
AE	Angle End
TB	Tall Base
TT	Tall Double Oven
OT	Outside Trash Pull-out
OS	Outside Sidepanel
WS	Wall Side
ID	Insert Door
IC	Insert Combination
IT	Insert Trash Pull-out
IP	Insert Propane Pull-out
IDW	Insert Drawer

** Base Style Code Key	
B	Burner
C	Cocktail Base
F	Full-height Drawer
M	Multi-Drawer
S	Sink
T	Trash
W	Warming Drawer

Corner Base Cabinets - Angle End: AEBxx02

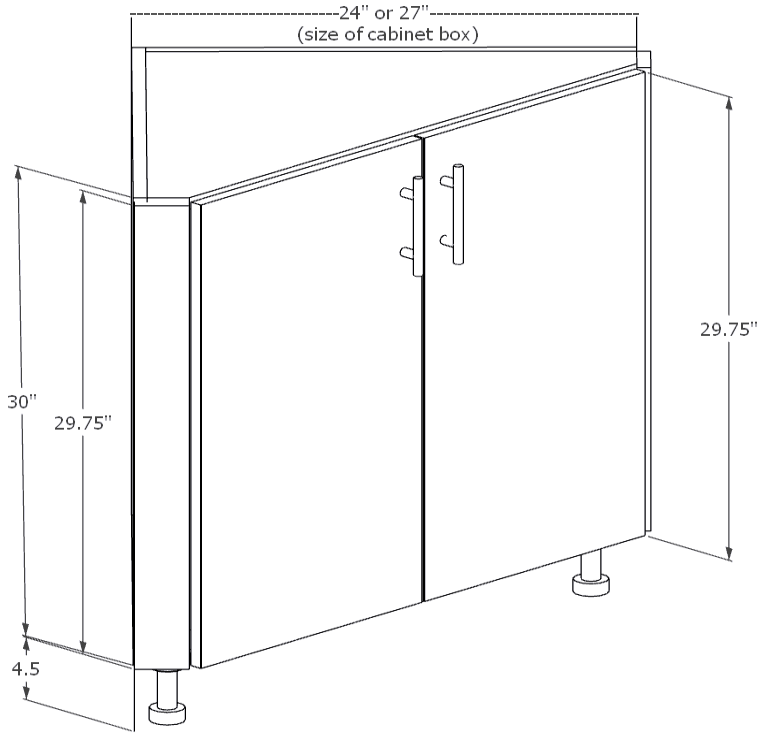

Product Description	
AEBxx02: Angle End Corner Base, 2 Doors. Includes half-depth shelf. NOTE: 27" cabinets door width 16.81" 24" cabinet door width 14.69"	
27" Depth SKU	24" Depth SKU
AEB2702	AEB2402

Corner Base Cabinets - Blind Corner Base: BCBxx01

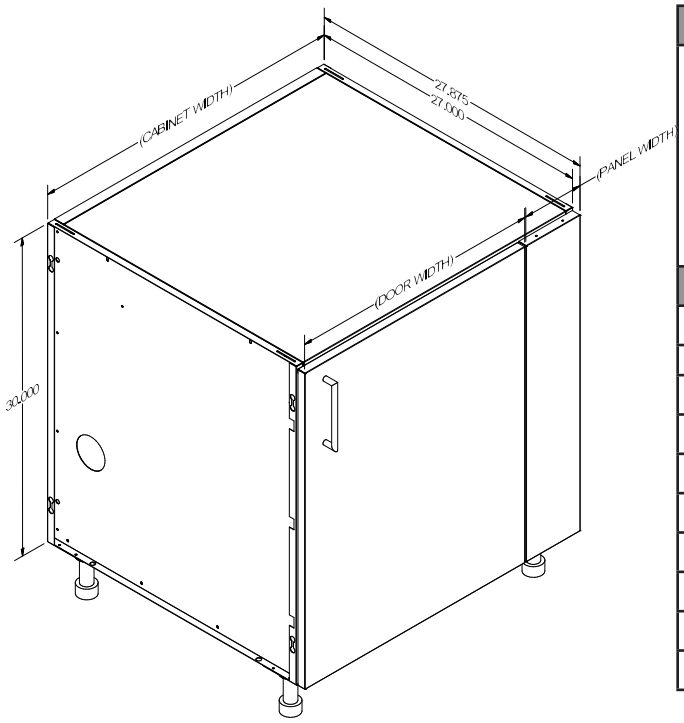

BCBxx01

Product Description
BCBxx01: Blind Corner Base, 1 door. *MUST SPECIFY DOOR PLACEMENT, DOOR WIDTH, & PANEL WIDTH IN PART NOTES, SEE SIZING MATRIX!* NOTE: 27"cabinets come with half-depth shelf 24"cabinets come with full-depth shelf

27” Depth SKU	24” Depth SKU
BCB3001-LH	BCB3001-24-LH
BCB3001-RH	BCB3001-24-RH
BCB3601-LH	BCB3601-24-LH
BCB3601-RH	BCB3601-24-RH
BCB4201-LH	BCB4201-24-LH
BCB4201-RH	BCB4201-24-RH
BCB4501-LH	BCB4501-24-LH
BCB4501-RH	BCB4501-24-RH
BCB4801-LH	BCB4801-24-LH
BCB4801-RH	BCB4801-24-RH

Blind Corner Base Matrix: Panel Width in bold, Door Width in center

Cabinet Width		**6**	**9**	**12**	**15**	**18**	**21**	**24**	**27**	**30**	**33**	**36**	**39**
	30	24	21	18	15	12	9						
	33		24	21	18	15	12	9					
	36			24	21	18	15	12	9				
	39				24	21	18	15	12	9			
	42					24	21	18	15	12	9		
	45						24	21	18	15	12	9	
	48							24	21	18	15	12	9

Corner Base Cabinets - Blind Corner Base: BCBxx11

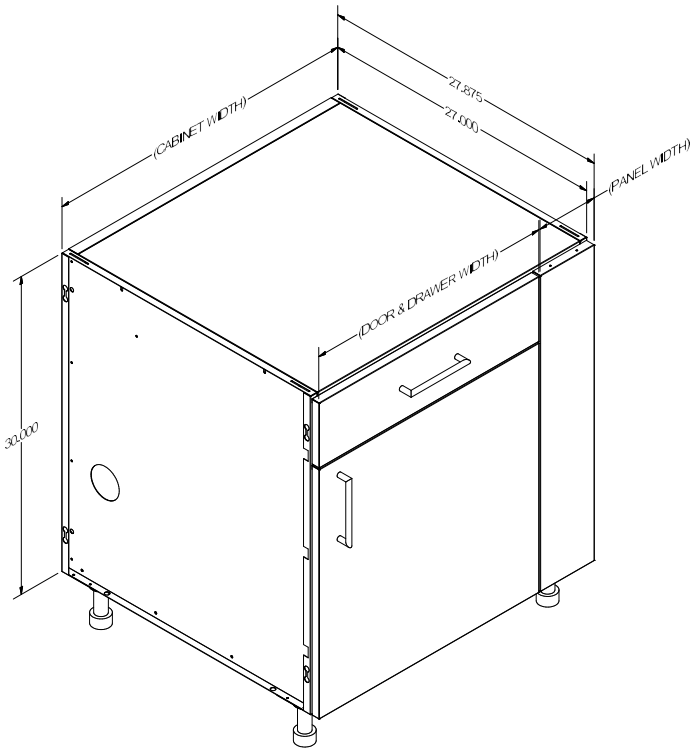

BCBxx11

Product Description	
BCBxx11: Blind Corner Base, 1 drawer, 1 door. *MUST SPECIFY DOOR PLACEMENT, DOOR WIDTH, & PANEL WIDTH IN PART NOTES, SEE SIZING MATRIX!* NOTE: 27"cabinets come with half-depth shelf 24"cabinets come with full-depth shelf	
27” Depth SKU	24” Depth SKU
BCB3011-LH	BCB3011-24-LH
BCB3011-RH	BCB3011-24-RH
BCB3611-LH	BCB3611-24-LH
BCB3611-RH	BCB3611-24-RH
BCB4211-LH	BCB4211-24-LH
BCB4211-RH	BCB4211-24-RH
BCB4511-LH	BCB4511-24-LH
BCB4511-RH	BCB4511-24-RH
BCB4811-LH	BCB4811-24-LH
BCB4811-RH	BCB4811-24-RH

Blind Corner Base Matrix: Panel Width in bold, Door Width in center

Cabinet Width	6	9	12	15	18	21	24	27	30	33	36	39
30	24	21	18	15	12	9						
33		24	21	18	15	12	9					
36			24	21	18	15	12	9				
39				24	21	18	15	12	9			
42					24	21	18	15	12	9		
45						24	21	18	15	12	9	
48							24	21	18	15	12	9

Corner Base Cabinets - Diagonal Corner: DCBxx, DCBSxx

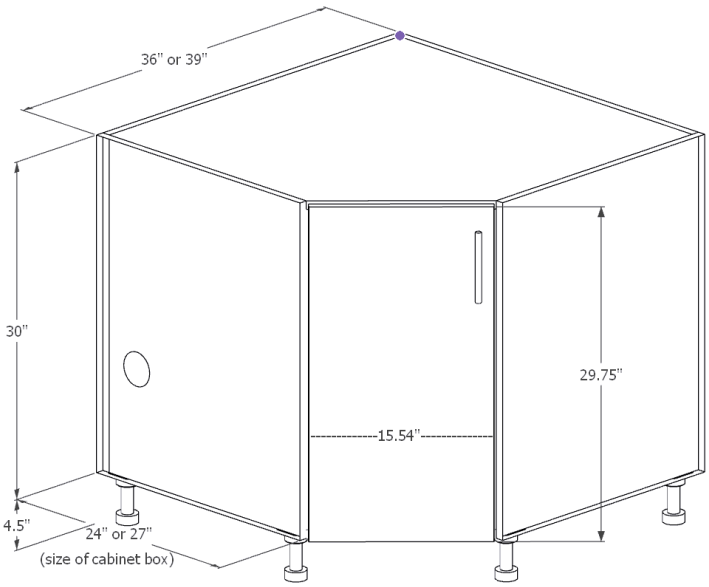

Product Description	
DCBxx: Diagonal Corner Base, 1 Door. Includes full-depth shelf. DCB39 matches cabinets of 27" depth, DCB36 matches cabinets of 24" depth.	
27" Depth SKU	24" Depth SKU
DCB39-LH	DCB36-LH
DCB39-RH	DCB36-RH

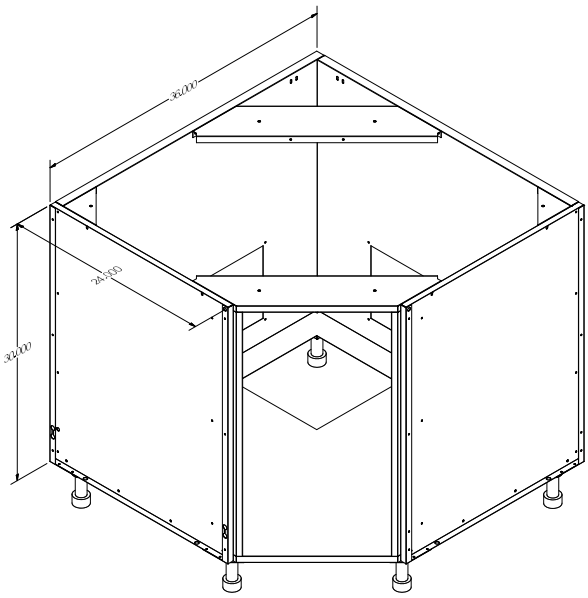

Product Description	
DCBSxx: Diagonal Corner Sink Base, 1 Door. DCBS39 matches cabinets of 27" depth, DCBS36 matches cabinets of 24" depth.	
27" Depth SKU	24" Depth SKU
DCBS39-LH	DCBS36-LH
DCBS39-RH	DCBS36-RH

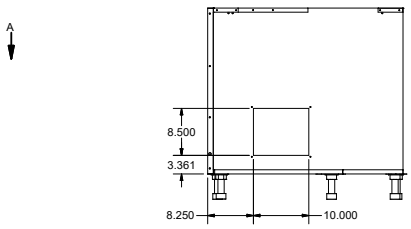

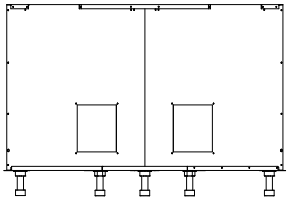

FRONT VIEW

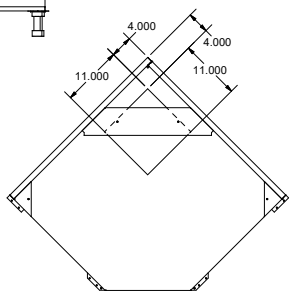

TOP VIEW

Storage Base Cabinets

Typical measurements for base storage cabinets.

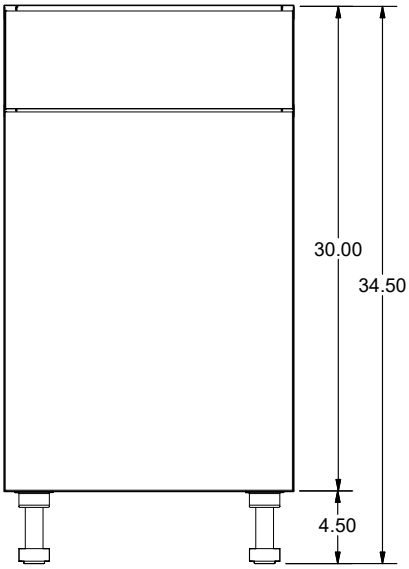

Front View

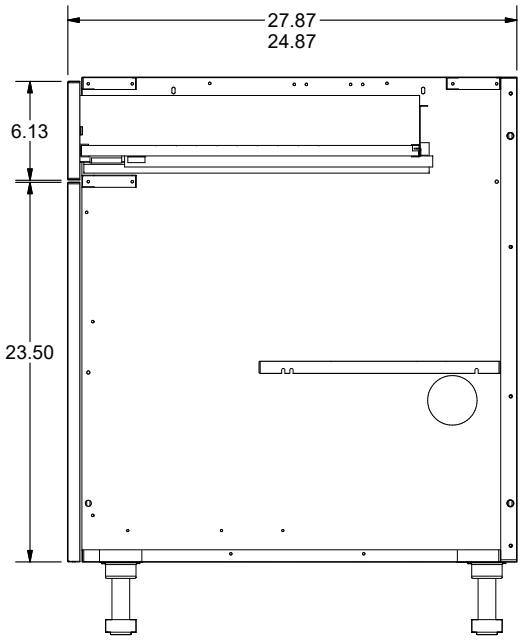

Side View

Typical cabinet foot location.

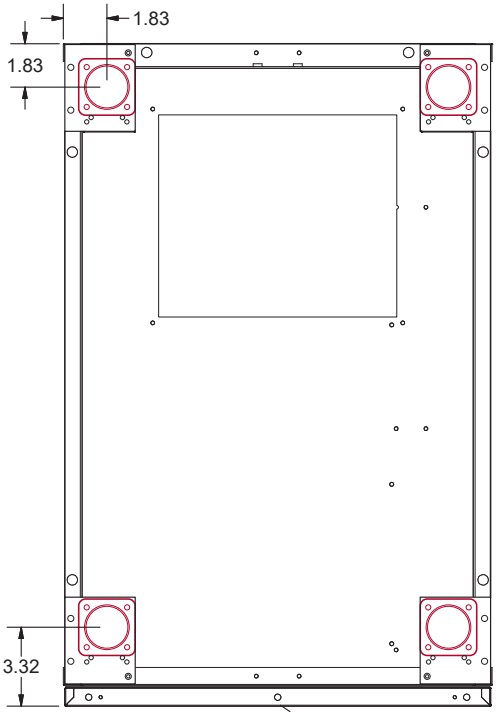

Bottom View

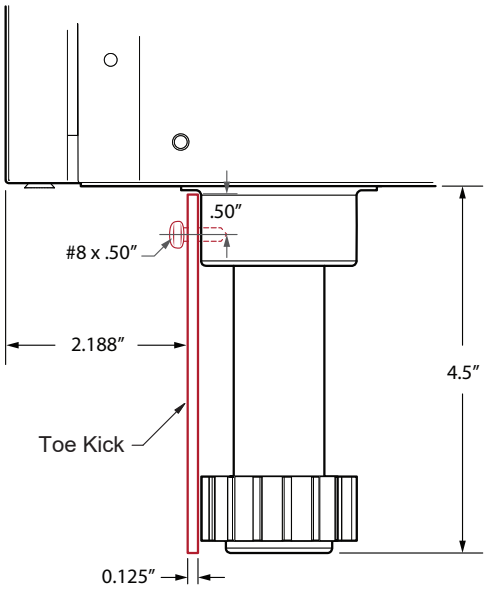

Side View

Storage Base Cabinets - Drawer/Door Base: OBDxx11, OBDxx12

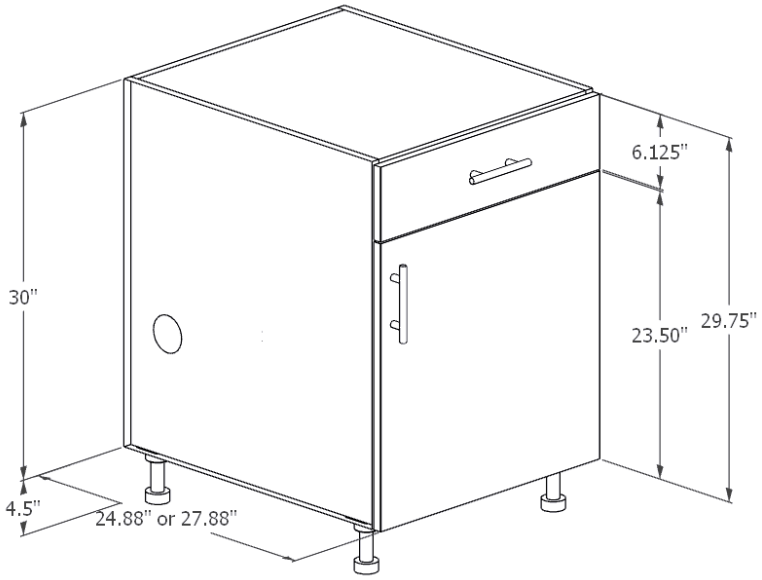

Product Description	
OBD: Drawer/door base, 1 door, 1 upper drawer, includes half-depth shelf.	
27” Depth SKU	24” Depth SKU
OBD0911-LH	OBD0911-24-LH
OBD0911-RH	OBD0911-24-RH
OBD1211-LH	OBD1211-24-LH
OBD1211-RH	OBD1211-24-RH
OBD1511-LH	OBD1511-24-LH
OBD1511-RH	OBD1511-24-RH
OBD1811-LH	OBD1811-24-LH
OBD1811-RH	OBD1811-24-RH
OBD2111-LH	OBD2111-24-LH
OBD2111-RH	OBD2111-24-RH
OBD2411-LH	OBD2411-24-LH
OBD2411-RH	OBD2411-24-RH

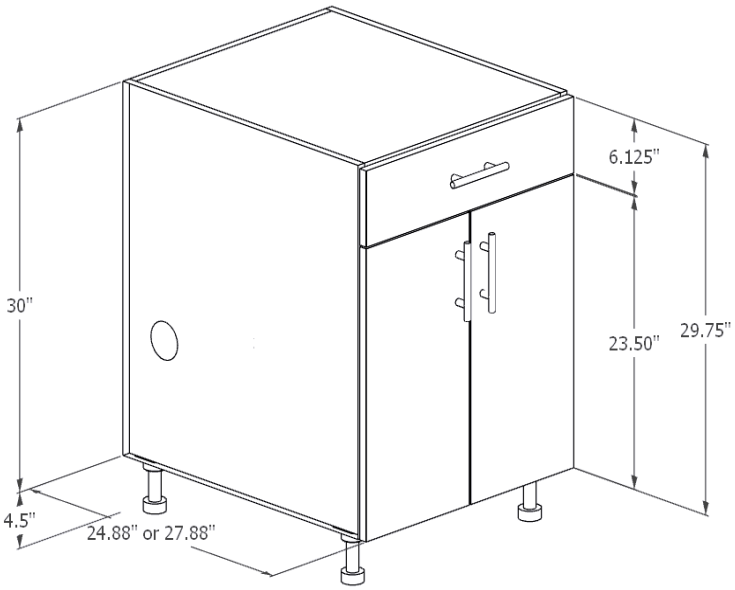

Product Description	
OBD: Drawer/doors base,1 upper drawer, 2 doors, includes half-depth shelf.	
27” Depth SKU	24” Depth SKU
OBD2412	OBD2412-24
OBD2712	OBD2712-24
OBD3012	OBD3012-24
OBD3312	OBD3312-24
OBD3612	OBD3612-24
OBD3912	OBD3912-24

Storage Base Cabinets - Full-Height Doors: OBFxx01, OBFxx02

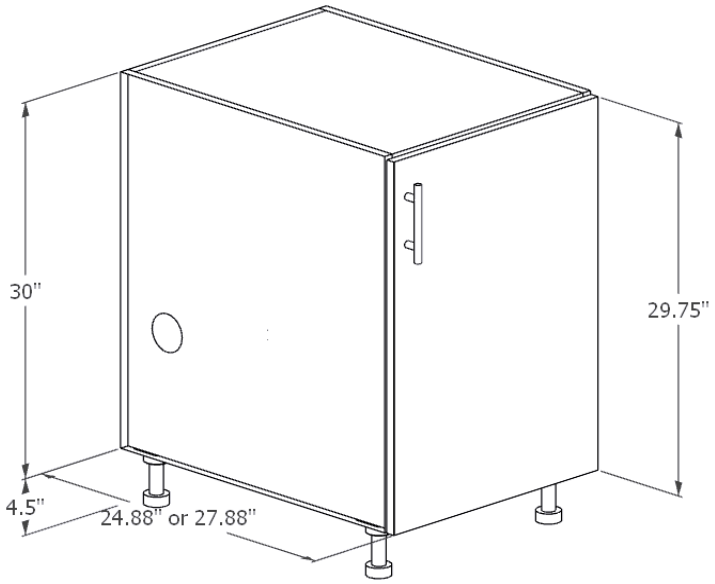

Product Description	
OBF: Full-height door base, 1 door, includes half-depth shelf.	
27” Depth SKU	24” Depth SKU
OBF0901-LH	OBF0901-24-LH
OBF0901-RH	OBF0901-24-RH
OBF1201-LH	OBF1201-24-LH
OBF1201-RH	OBF1201-24-RH
OBF1501-LH	OBF1501-24-LH
OBF1501-RH	OBF1501-24-RH
OBF1801-LH	OBF1801-24-LH
OBF1801-RH	OBF1801-24-RH
OBF2101-LH	OBF2101-24-LH
OBF2101-RH	OBF2101-24-RH
OBF2401-LH	OBF2401-24-LH
OBF2401-RH	OBF2401-24-RH

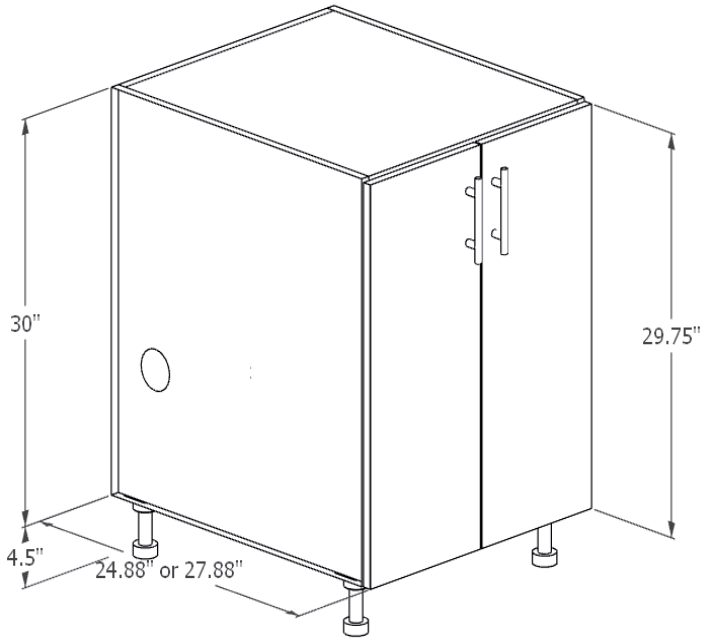

Product Description	
OBF: Full-height door base, 2 doors, includes half-depth shelf.	
27” Depth SKU	24” Depth SKU
OBF2402	OBF2402-24
OBF2702	OBF2702-24
OBF3002	OBF3002-24
OBF3302	OBF3302-24
OBF3602	OBF3602-24
OBF3902	OBF3902-24
OBF4202	OBF4202-24
OBF4502	OBF4502-24
OBF4802	OBF4802-24
OBF5202	OBF5202-24

NOTE: Cabinet boxes are 30″ high plus 4.5″ leveling legs or 2″ (ADA) leg heights.

Storage Base Cabinets - Open Base Cabinet: OBFxx00

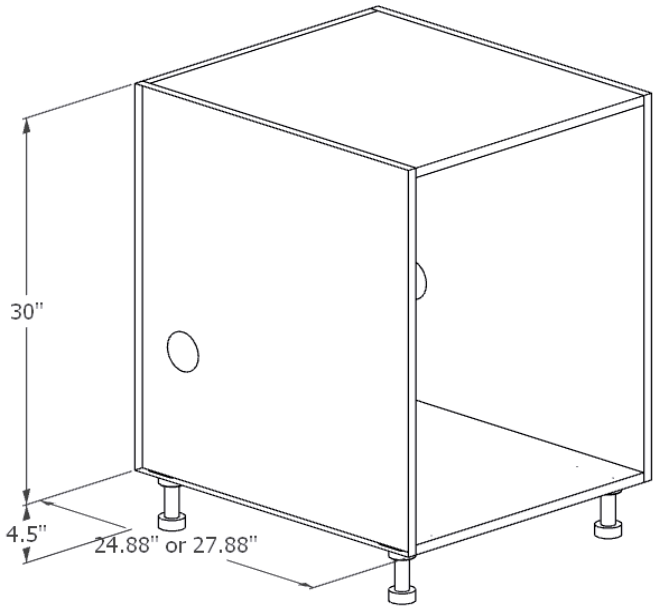

OBFxx00 cabinet box depth is 24.88”D or 27.88”D to match total depth of standard cabinets with fronts. Flush end panels (OFE) are available to finish the exposed side portion that is seen for when these OBFxx00 bases are placed next to standard bases.

Product Description	
OBFxx00: Open base cabinet, #4 brushed finish, No drawers/doors, no holes on interior,. Includes a full-depth shelf.	
27” Depth SKU	24” Depth SKU
OBF0900	OBF0900-24
OBF1200	OBF1200-24
OBF1500	OBF1500-24
OBF1800	OBF1800-24
OBF2100	OBF2100-24
OBF2400	OBF2400-24
OBF2700	OBF2700-24
OBF3300	OBF3300-24
OBF3600	OBF3600-24
OBF3900	OBF3900-24
OBF4200	OBF4200-24
OBF4500	OBF4500-24
OBF4800	OBF4800-24
OBF5200	OBF5200-24

Storage Base Cabinets - Insert Cabinets: OBIxx10 and OBI4200

Product Description	
OBIxx10: XX"W x 27"D Base - 1 Upper Drawer, no doors. Made to accept Dry Pantry Storage box or other insert. ***this cabinet needs a trim kit (OBIK).	
27” Depth SKU	24” Depth SKU
OBI3010	OBI3010-24
OBI3610	OBI3610-24
OBI4200	OBI4200-24

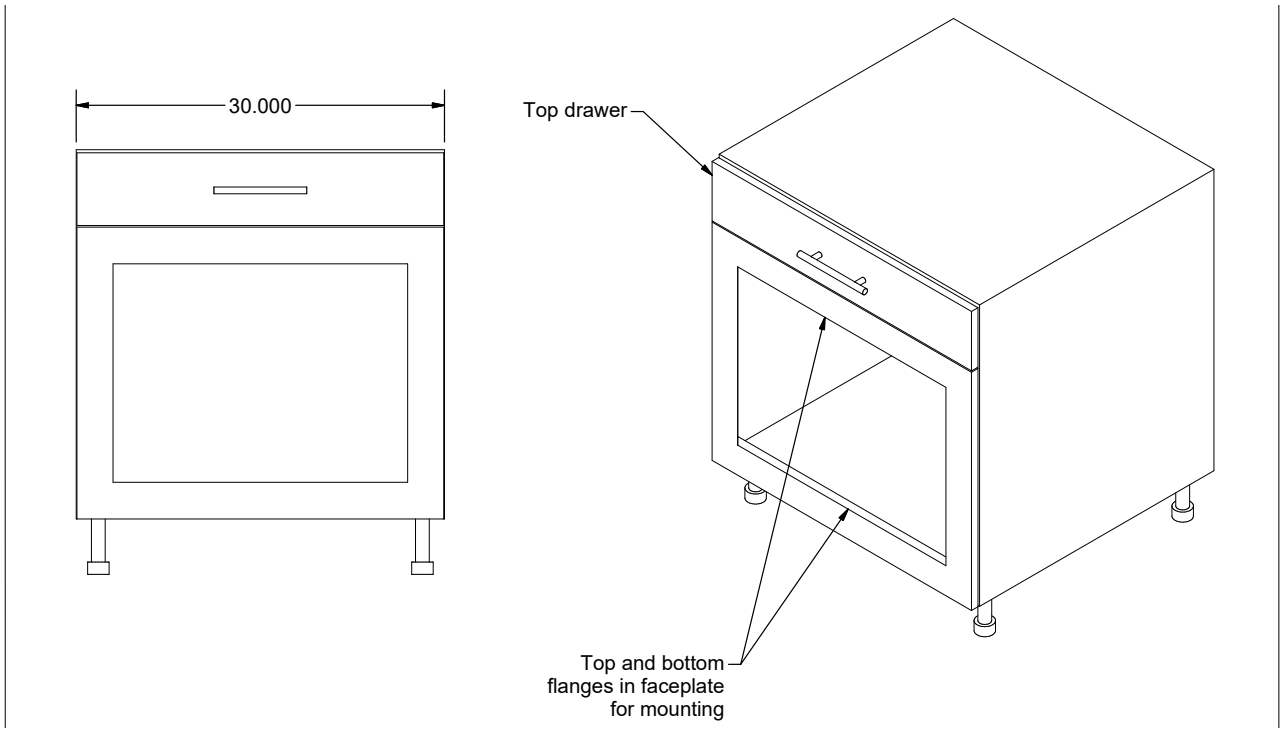

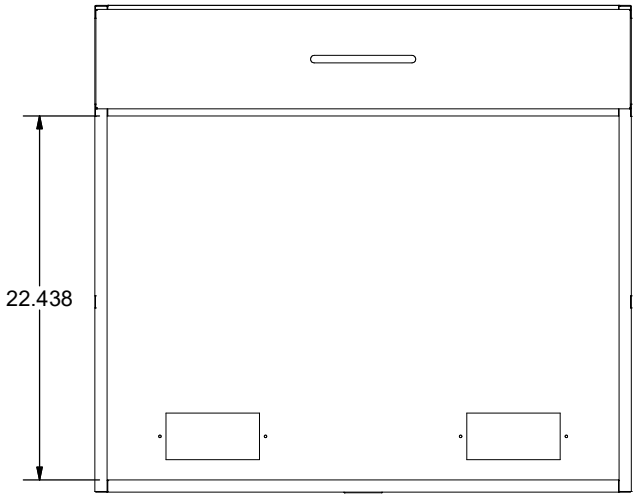

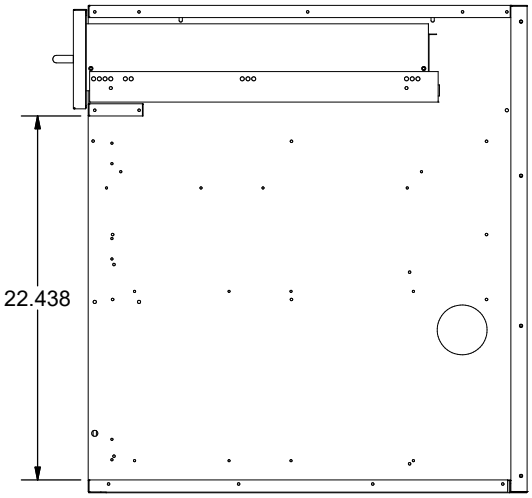

Storage Base Cabinets - Multi-Drawer: OBMxx10 and OBMxx20

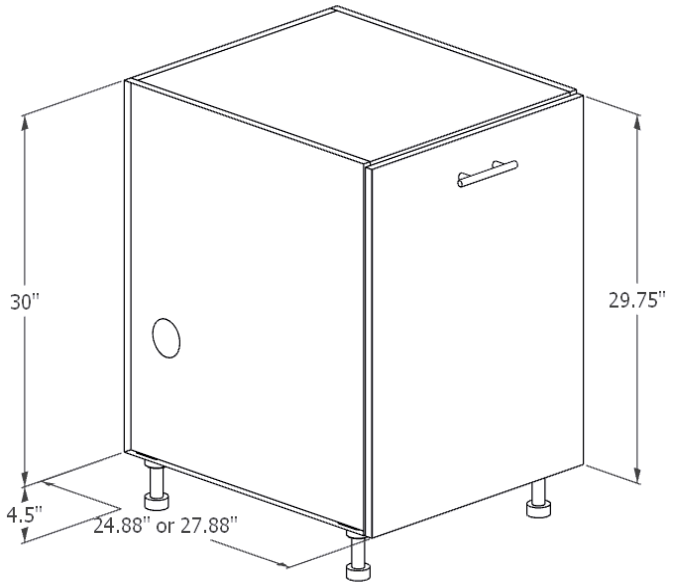

Product Description	
OBMxx10: 1 Full-Height drawer front attached to a large drawer.	
27” Depth SKU	24” Depth SKU
OBM0910	OBM0910-24
OBM1210	OBM1210-24
OBM1510	OBM1510-24
OBM1810	OBM1810-24
OBM2110	OBM2110-24
OBM2410	OBM2410-24
OBM2710	OBM2710-24
OBM3010	OBM3010-24

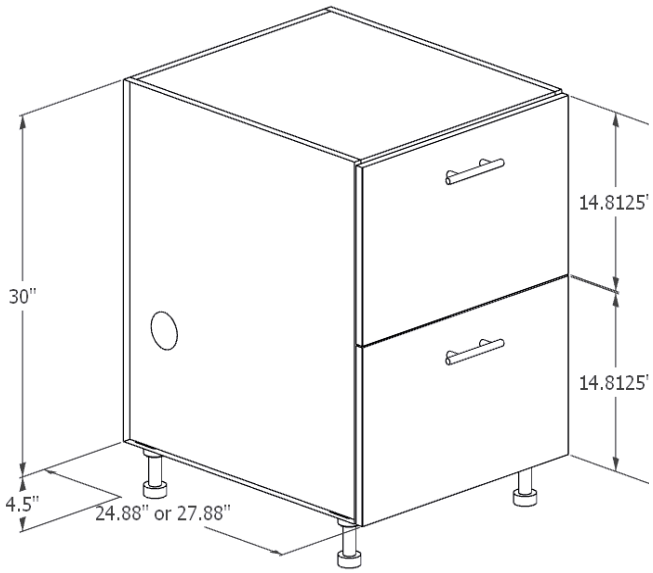

Product Description	
OBMxx20: Multi-Drawer Base, 2 Drawers	
27” Depth SKU	24” Depth SKU
OBM0920	OBM0920-24
OBM1220	OBM1220-24
OBM1520	OBM1520-24
OBM1820	OBM1820-24
OBM2120	OBM2120-24
OBM2420	OBM2420-24
OBM2720	OBM2720-24
OBM3020	OBM3020-24
OBM3320	OBM3320-24
OBM3620	OBM3620-24

Storage Base Cabinets - Multi-Drawer: OBMxx30 and OBMxx40

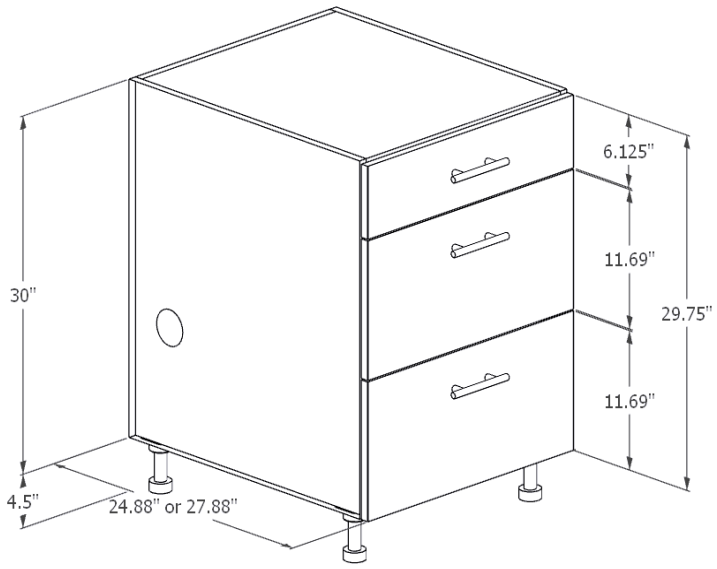

Product Description	
OBMxx30: Multi-Drawer Base, 3 Drawers	
27” Depth SKU	24” Depth SKU
OBM0930	OBM0930-24
OBM1230	OBM1230-24
OBM1530	OBM1530-24
OBM1830	OBM1830-24
OBM2130	OBM2130-24
OBM2430	OBM2130-24
OBM2730	OBM2730-24
OBM3030	OBM3030-24
OBM3330	OBM3330-24
OBM3630	OBM3630-24

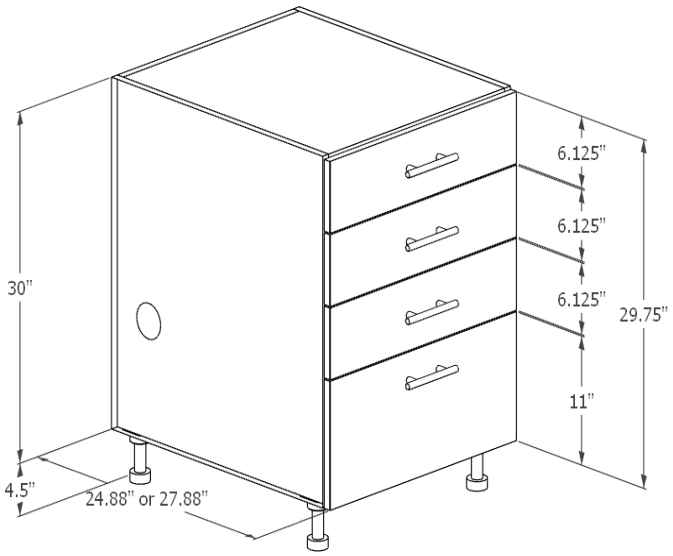

Product Description	
OBMxx40: Multi-Drawer Base, 4 Drawers	
27” Depth SKU	24” Depth SKU
OBM0940	OBM0940-24
OBM1240	OBM1240-24
OBM1540	OBM1540-24
OBM1840	OBM1840-24
OBM2140	OBM2140-24
OBM2440	OBM2440-24
OBM2740	OBM2740-24
OBM3040	OBM3040-24
OBM3340	OBM3340-24
OBM3640	OBM3640-24

Storage Base Cabinets - Multi-Drawer Tecno, Nested

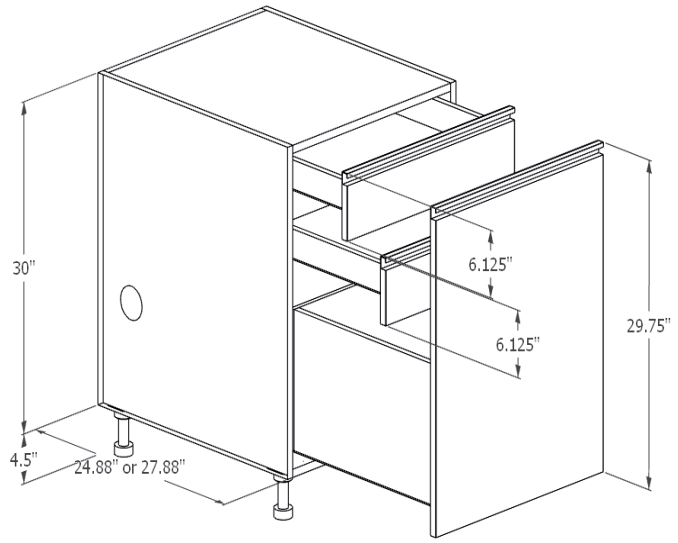

Product Description	
OBMxx30 TECNO: Outdoor Base Multi-Drawer TECNO, Full-height drawer front with 2 nested drawers with Tecno handles. NOTE: TECNO is available only in Brown Jordan Outdoor Kitchens line.	
27” Depth SKU	24” Depth SKU
OBM1530N TECNO	OBM1530N-24 TECNO
OBM1830N TECNO	OBM1830N-24 TECNO
OBM2130N TECNO	OBM2130N-24 TECNO
OBM2430N TECNO	OBM2430N-24 TECNO
OBM2730N TECNO	OBM2730N-24 TECNO
OBM3030N TECNO	OBM3030N-24 TECNO

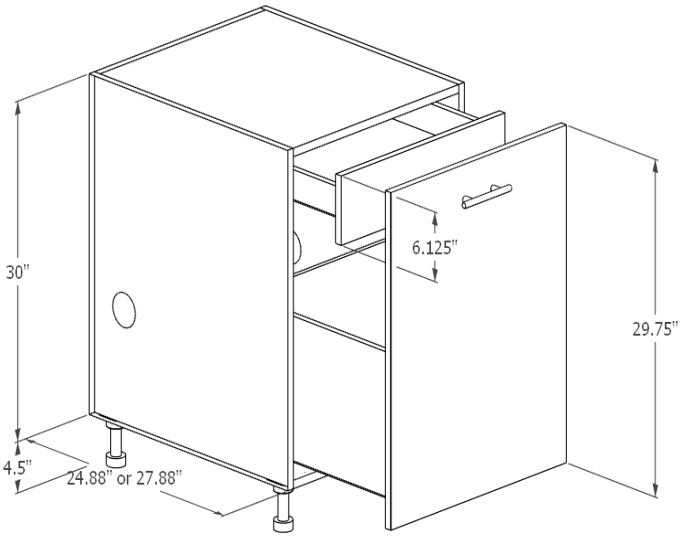

Product Description	
OBMxx20N: 1 Full-Height drawer front attached to a large drawer, 1 nested drawer inside at top with Hampton front (no handle, pull to open).	
27” Depth SKU	24” Depth SKU
OBM0920N	OBM0920N-24
OBM1220N	OBM1220N-24
OBM1520N	OBM1520N-24
OBM1820N	OBM1820N-24
OBM2120N	OBM2120N-24
OBM2420N	OBM2420N-24
OBM2720N	OBM2720N-24
OBM3020N	OBM3020N-24

Sink Base Cabinets - OBSxxxx

All OBS (Sink Base Cabinets) have pre-cut openings in the rear and bottom panels as well as standard side openings for plumbing and electrical conduit.

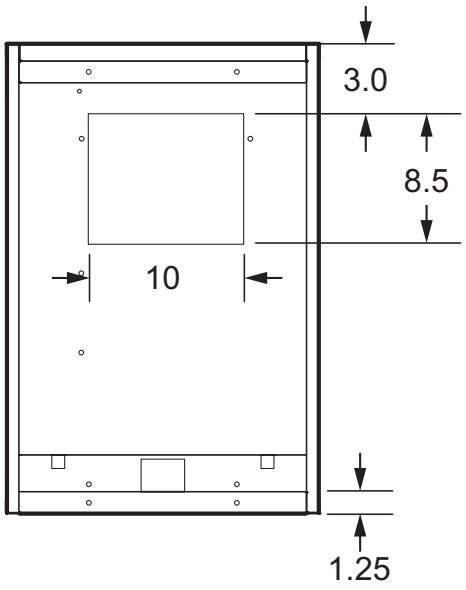

Top View

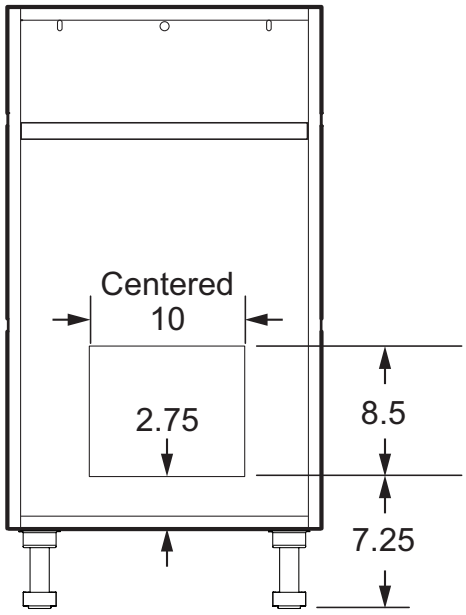

Front View

Sink Base Cabinets - False Front: OBSxx01, OBSxx02

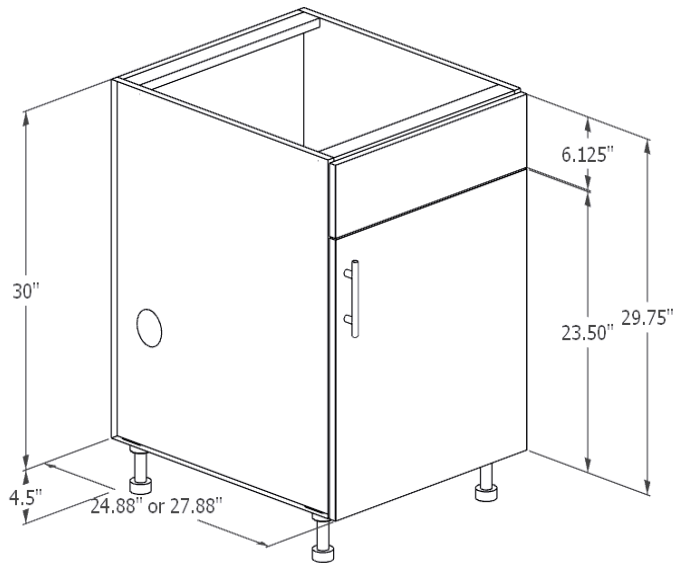

Product Description	
OBSxx01: Outdoor Sink Base, false Drawer front, 1 Door.	
27” Depth SKU	24” Depth SKU
OBS1201-LH	OBS1201-24-LH
OBS1201-RH	OBS1201-24-RH
OBS1501-LH	OBS1501-24-LH
OBS1501-RH	OBS1501-24-RH
OBS1801-LH	OBS1801-24-LH
OBS1801-RH	OBS1801-24-RH
OBS2101-LH	OBS2101-24-LH
OBS2101-RH	OBS2101-24-RH
OBS2401-LH	OBS2401-24-LH
OBS2401-RH	OBS2401-24-RH

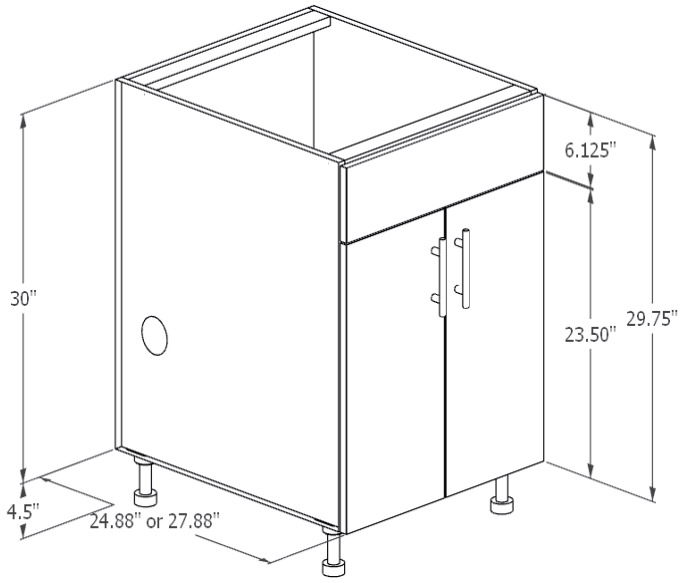

Product Description	
OBSxx02: Outdoor Sink Base, false Drawer front, 2 Doors.	
27” Depth SKU	24” Depth SKU
OBS2402	OBS2402-24
OBS2702	OBS2702-24
OBS3002	OBS3002-24
OBS3302	OBS3302-24
OBS3602	OBS3602-24
OBS3902	OBS3902-24
OBS4202	OBS4202-24
OBS4502	OBS4502-24
OBS4802	OBS4802-24

Sink Base Cabinets - Full-Height Door: OBSxxxx-FHD

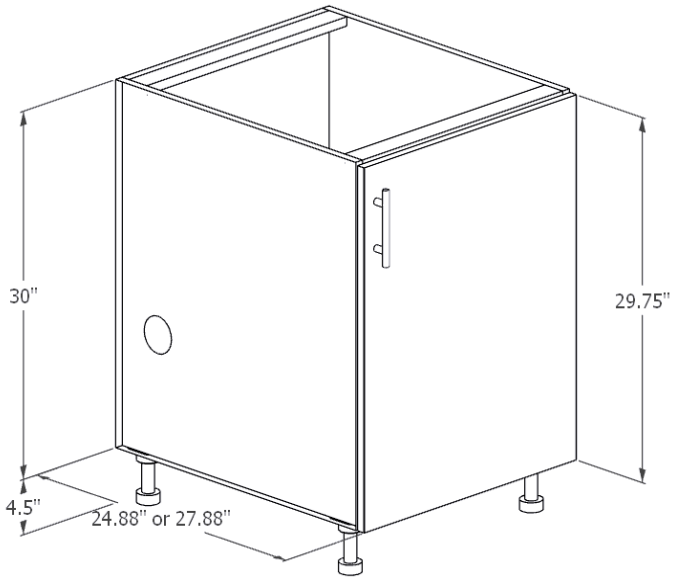

Product Description	
OBSxx01-FHD: Outdoor Sink Base, 1 Full-Height Door	
27” Depth SKU	24” Depth SKU
OBS1201-FHD-LH	OBS1201-24-FHD-LH
OBS1201-FHD-RH	OBS1201-24-FHD-RH
OBS1501-FHD-LH	OBS1501-24-FHD-LH
OBS1501-FHD-RH	OBS1501-24-FHD-RH
OBS1801-FHD-LH	OBS1801-24-FHD-LH
OBS1801-FHD-RH	OBS1801-24-FHD-RH
OBS2101-FHD-LH	OBS2101-24-FHD-LH
OBS2101-FHD-RH	OBS2101-24-FHD-RH
OBS2401-FHD-LH	OBS2401-24-FHD-LH
OBS2401-FHD-RH	OBS2401-24-FHD-RH

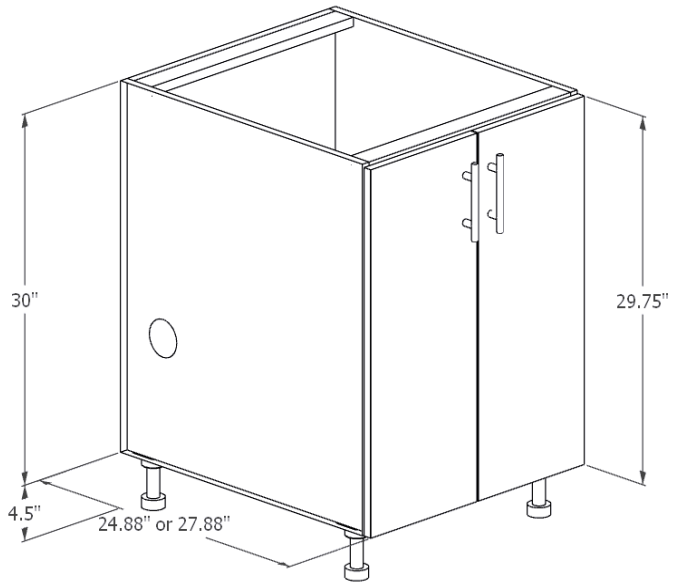

Product Description	
OBSxx02-FHD: Outdoor Sink Base, 2 Full-Height Doors	
27” Depth SKU	24” Depth SKU
OBS2402-FHD	OBS2402-24-FHD
OBS2702-FHD	OBS2702-24-FHD
OBS3002-FHD	OBS3002-24-FHD
OBS3302-FHD	OBS3302-24-FHD
OBS3602-FHD	OBS3602-24-FHD
OBS3902-FHD	OBS3902-24-FHD
OBS4202-FHD	OBS4202-24-FHD
OBS4502-FHD	OBS4502-24-FHD
OBS4802-FHD	OBS4802-24-FHD

Sink Base Cabinets - Farm Sink Bases

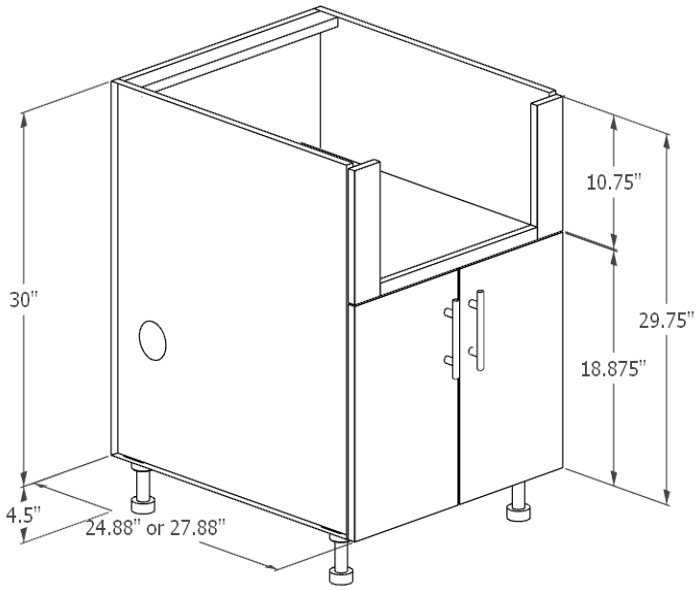

Product Description	
OBSxx02D-FARM: Outdoor Sink Base for Farm/ Apron sinks, 2 Full height doors (1 door available for 24"W), specify sink for trim kit.	
27" Depth SKU	24" Depth SKU
OBS2401D-FARM-LH	OBS2401D-24-FARM-LH
OBS2401D-FARM-RH	OBS2401D-24-FARM-RH
OBS2402D-FARM	OBS2402D-24-FARM
OBS2702D-FARM	OBS2702D-24-FARM
OBS3002D-FARM	OBS3002D-24-FARM
OBS3302D-FARM	OBS3302D-24-FARM
OBS3602D-FARM	OBS3602D-24-FARM
OBS3902D-FARM	OBS3902D-24-FARM
OBS4202D-FARM	OBS4202D-24-FARM
OBS4502D-FARM	OBS4502D-24-FARM
OBS4802D-FARM	OBS4802D-24-FARM

Sink Base Cabinets - Galley Sink Bases

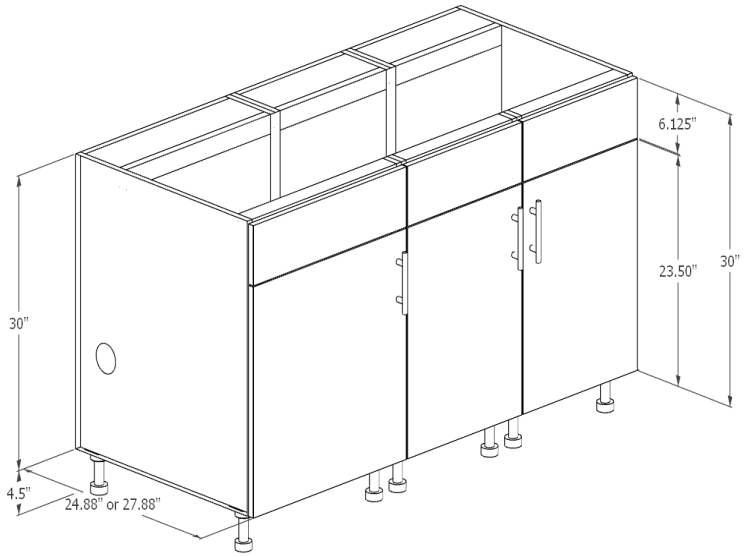

Product Description	
OBSxx0y Galley: Outdoor Sink Base for Galley Sinks only. Consists of multiple smaller sink bases with cutouts to support Galley Sinks. Either made with False Front or Full Height Door (-FHD) *See table below for cabinet and back panel configuration.*	
27” Depth SKU	24” Depth SKU
OBS3002 GALLEY	OBS3002-24 GALLEY
OBS3602 GALLEY	OBS3602-24 GALLEY
OBS4802 GALLEY	OBS4802-24 GALLEY
OBS6003 GALLEY	OBS6003-24 GALLEY
OBS3002-FHD GALLEY	OBS3002-24-FHD GALLEY
OBS3602-FHD GALLEY	OBS3602-24-FHD GALLEY
OBS4802-FHD GALLEY	OBS4802-24-FHD GALLEY
OBS6003-FHD GALLEY	OBS6003-24-FHD GALLEY
OBS7203-FHD GALLEY	OBS7203-24-FHD GALLEY
OBS8404-FHD GALLEY	OBS8404-24-FHD GALLEY

Galley SKU	Cabinet/OBP Configuration
OBS3002 GALLEY	1-30" cabinet, OBP30
OBS3602 GALLEY	1-36" cabinet, OBP36
OBS4802 GALLEY	2-24" cabinets, 2-OBP24
OBS6003 GALLEY	2-18" cabinets, 1-24" cabinet
OBS6003 GALLEY	2-OBP18, 1-OBP24
OBS7203-FHD GALLEY	3-24" cabinets, 3-OBP24
OBS8404-FHD GALLEY	4-21" cabinets, 4-OBP21

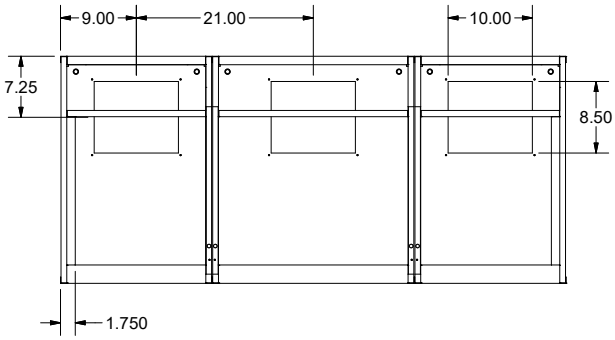

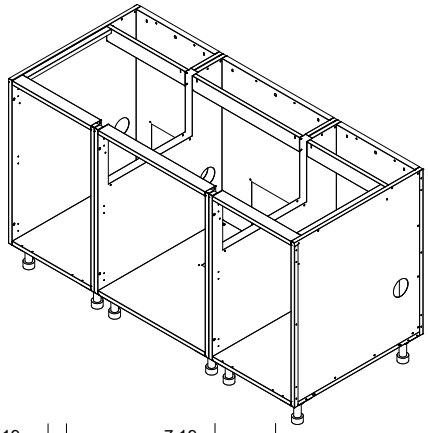

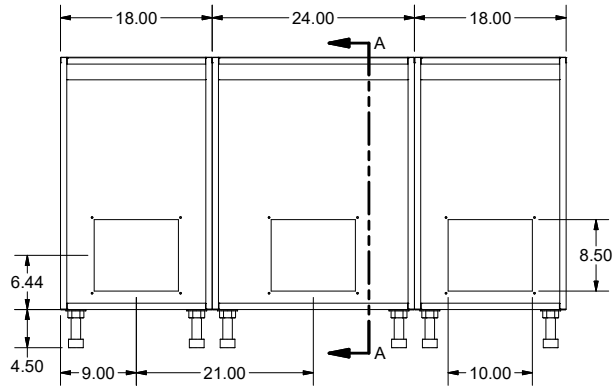

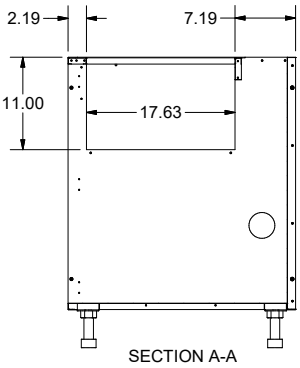

Sink Base Cabinets - OBSxx00 ADA

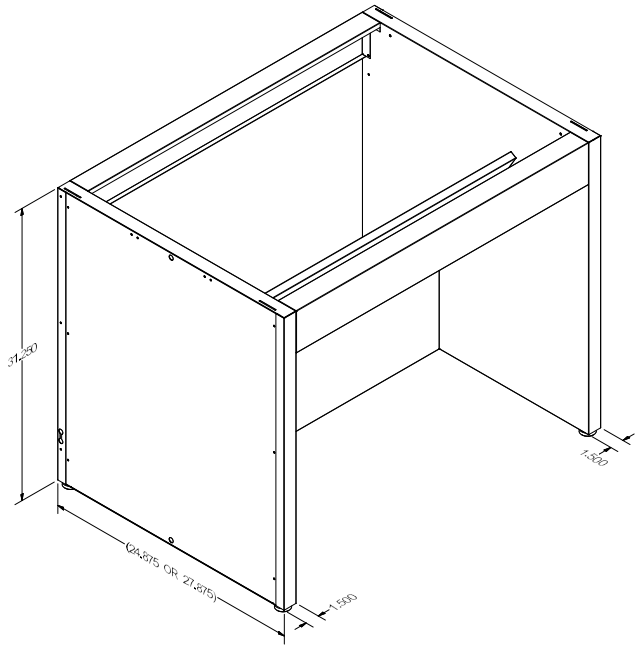

Product Description	
OBSxx00 ADA: Outdoor ADA Sink Base, no doors, removable panel inside, 32.25” total height for ADA compliance. Glides on bottom adjustable up to 1”H.	
27” Depth SKU	24” Depth SKU
OBS3600 ADA	OBS3600-24 ADA
OBS3900 ADA	OBS3900-24 ADA
OBS4200 ADA	OBS4200-24 ADA
OBS4500 ADA	OBS4500-24 ADA
OBS4800 ADA	OBS4800-24 ADA

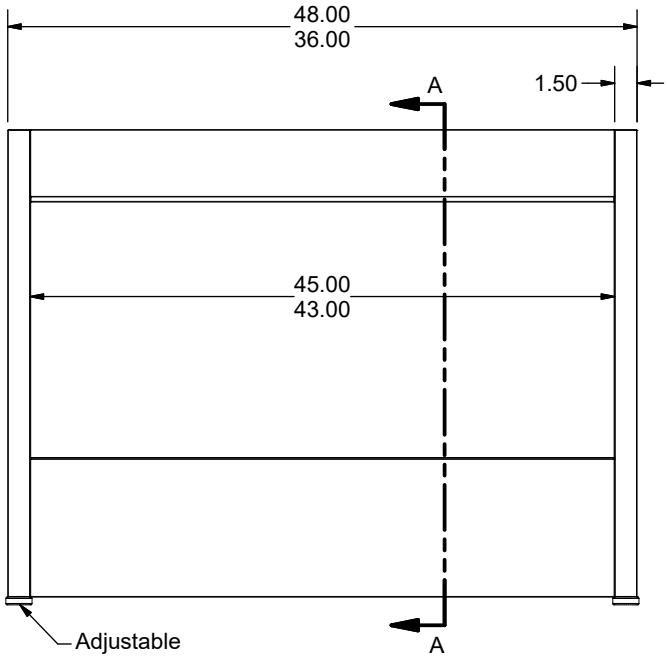

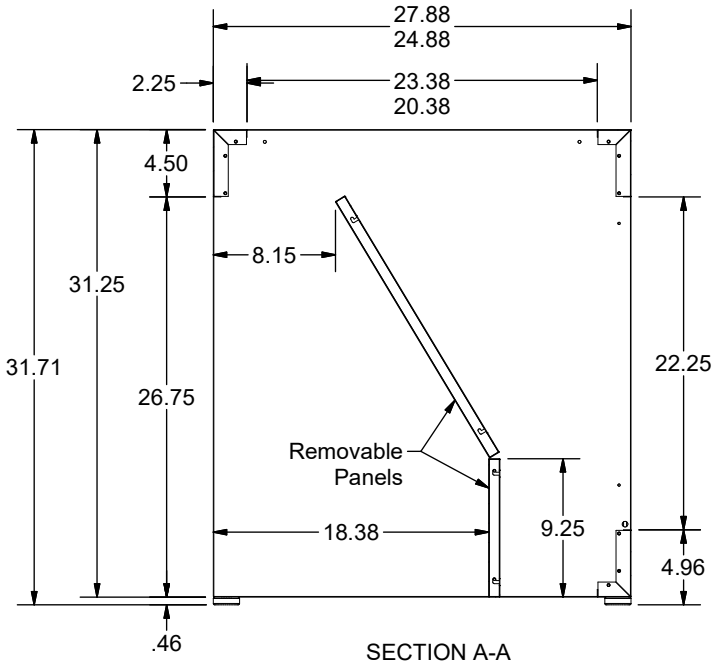

Sink Base Cabinets - ADA Sink Space

Product Description	
OBSxx00 ADA SINK SPACE: ADA compliant Sink Base/Workstation, no doors. Consists of side panels, extrusions, and front/back rails with modesty panel. Attaches directly to adjacent cabinets, no leveling legs needed.	
27” Depth SKU	24” Depth SKU
OBS3600 ADA SINK SPACE	OBS3600-24 ADA SINK SPACE
OBS3900 ADA SINK SPACE	OBS3900-24 ADA SINK SPACE
OBS4200 ADA SINK SPACE	OBS4200-24 ADA SINK SPACE
OBS4500 ADA SINK SPACE	OBS4500-24 ADA SINK SPACE
OBS4800 ADA SINK SPACE	OBS4800-24 ADA SINK SPACE

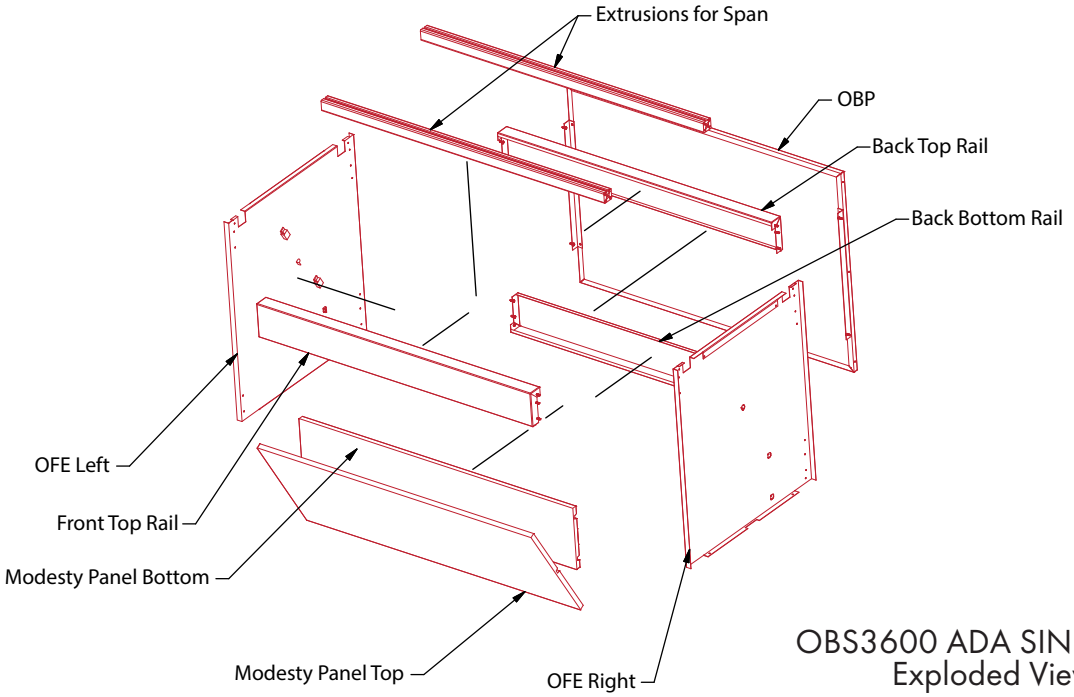

OBS3600 ADA SINK SPACE
Exploded View

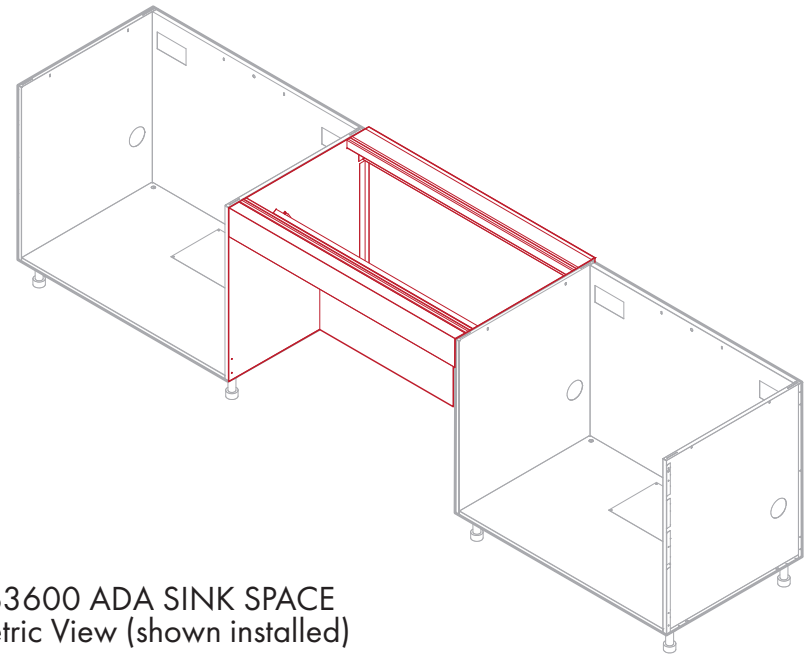

OBS3600 ADA SINK SPACE
Isometric View (shown installed)

Sink Base Cabinets - ADA Sink Space

ADA Sink Space 36-39-42-45

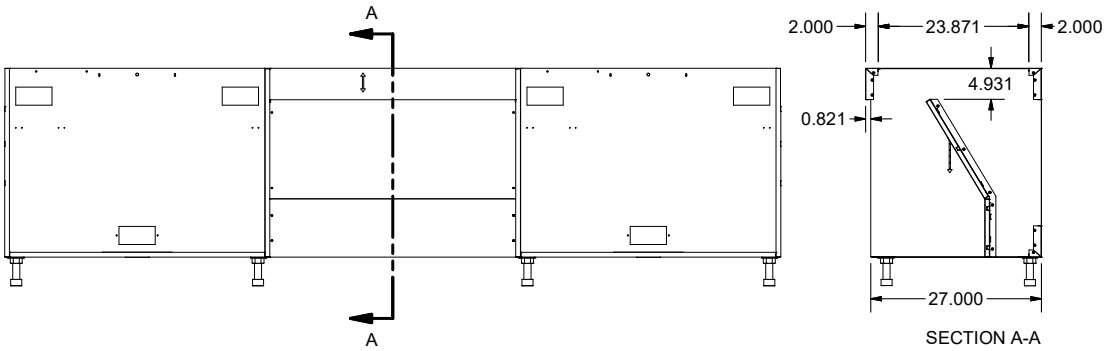

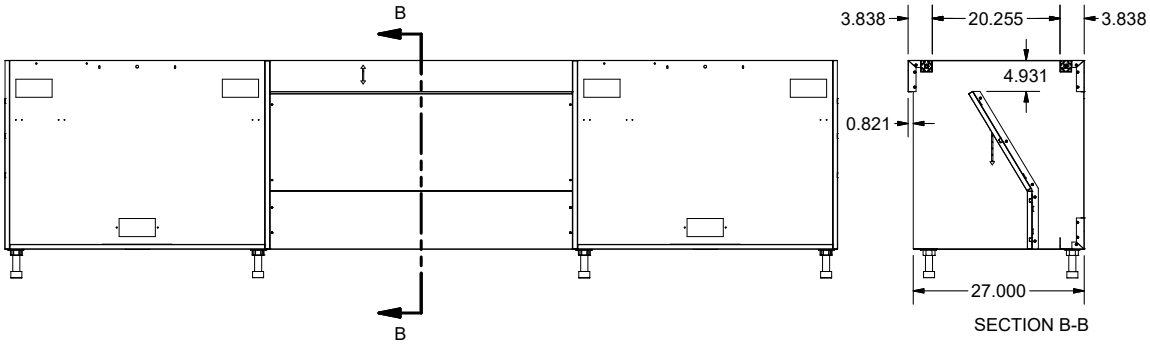

ADA Sink Space 48-60

OBSxx00 ADA SINK SPACE configuration variations

Trash Base Cabinets - OBTxx00, OBTxx10

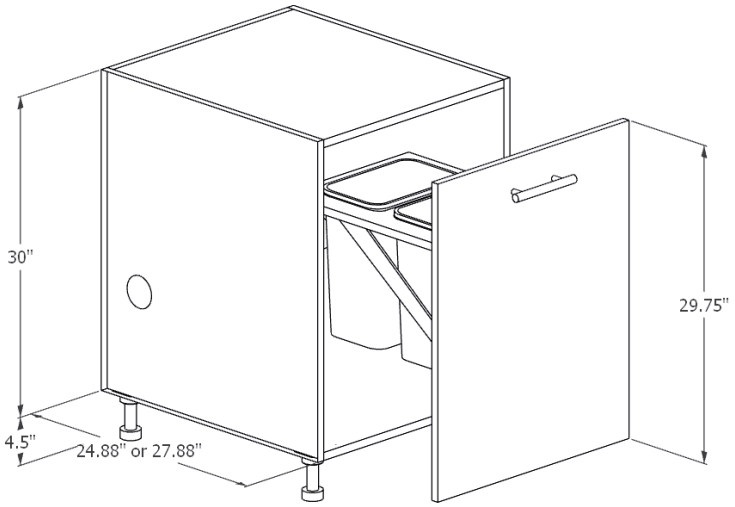

Product Description	
OBTxx00: Outdoor Trash Base for 30 quart cans. 1 Full-Height Door. NOTE: 15″ cabinets have 1 trash bin. Cabinets 18″ and above have 2 trash bins.	
27” Depth SKU	24” Depth SKU
OBT1500	OBT1500-24
OBT1800	OBT1800-24
OBT2100	OBT2100-24
OBT2400	OBT2400-24
OBT2700	OBT2700-24

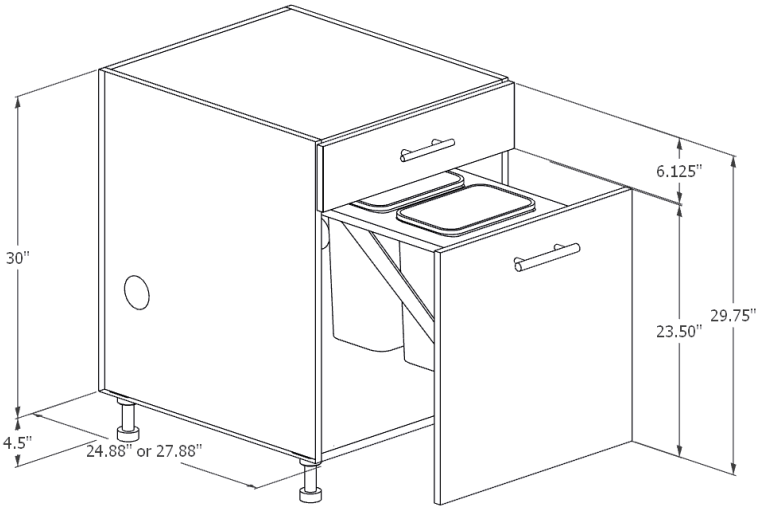

Product Description	
OBTxx10: Outdoor Trash Base for 30 quart cans. 1 Full-Height Door, 1 drawer above. NOTE: 15″ cabinets have 1 trash bin. Cabinets 18″ and above have 2 trash bins.	
27” Depth SKU	24” Depth SKU
OBT1510	OBT1510-24
OBT1810	OBT1810-24
OBT2110	OBT2110-24
OBT2410	OBT2410-24
OBT2710	OBT2710-24

Trash Base Cabinets - OBTxx10N (nested), OBTxx10N TECNO

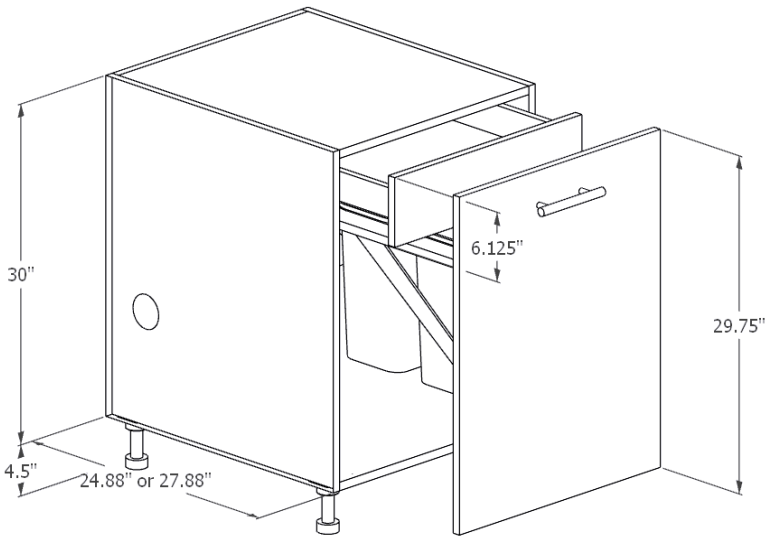

Product Description	
OBTxx10N: Outdoor Trash Base Nested Top Drawer for 30 quart cans. 1 Full-Height Door, 1 Hidden Drawer (Hampton front, no handle, pull underneath to open); Pull-out Trash attached to Door. NOTE: 15″ cabinets have 1 trash bin. Cabinets 18″ and above have 2 trash bins.	
27” Depth SKU	24” Depth SKU
OBT1510N	OBT1510N-24
OBT1810N	OBT1810N-24
OBT2110N	OBT2110N-24
OBT2410N	OBT2410N-24
OBT2710N	OBT2710N-24

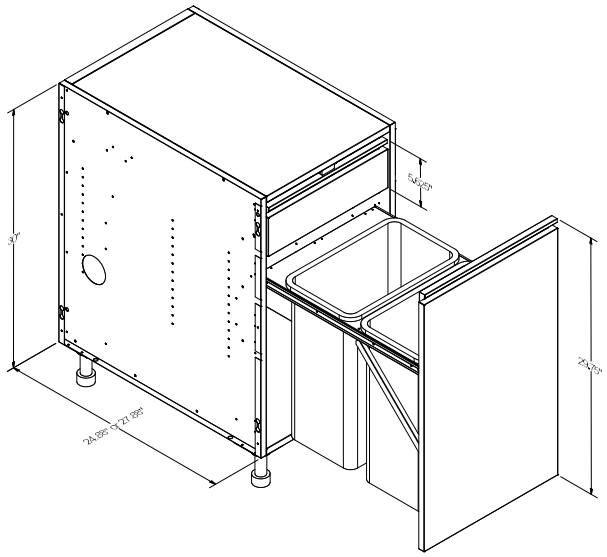

Product Description	
OBTxx10N TECNO: Outdoor Trash Base Nested Top Drawer for 30 quart cans. 1 Full-Height Door, 1 Hidden Drawer (Tecno handles on all fronts); Pull-out Trash attached to Door. NOTE: 15″ cabinets have 1 trash bin. Cabinets 18″ and above have 2 trash bins.	
27” Depth SKU	24” Depth SKU
OBT1510N TECNO	OBT1510N-24 TECNO
OBT1810N TECNO	OBT1810N-24 TECNO
OBT2110N TECNO	OBT2110N-24 TECNO
OBT2410N TECNO	OBT2410N-24 TECNO
OBT2710N TECNO	OBT2710N-24 TECNO

Trash Base Cabinets - Large 51 Quart Can: OBTxx00L

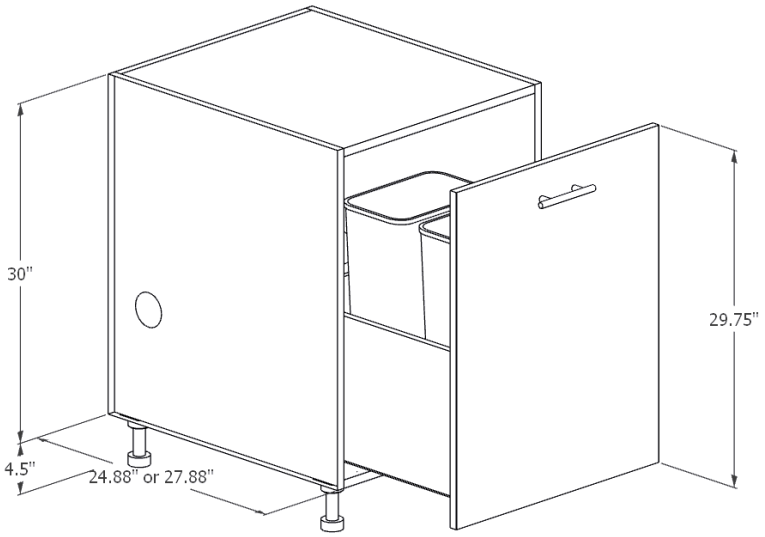

Product Description	
OBTxx00L: Outdoor Trash Base for Large 51 quart cans. 1 Full-Height Door.	
27” Depth SKU	24” Depth SKU
OBT2100L	OBT2100L-24
OBT2400L	OBT2400L-24
OBT2700L	OBT2700L-24

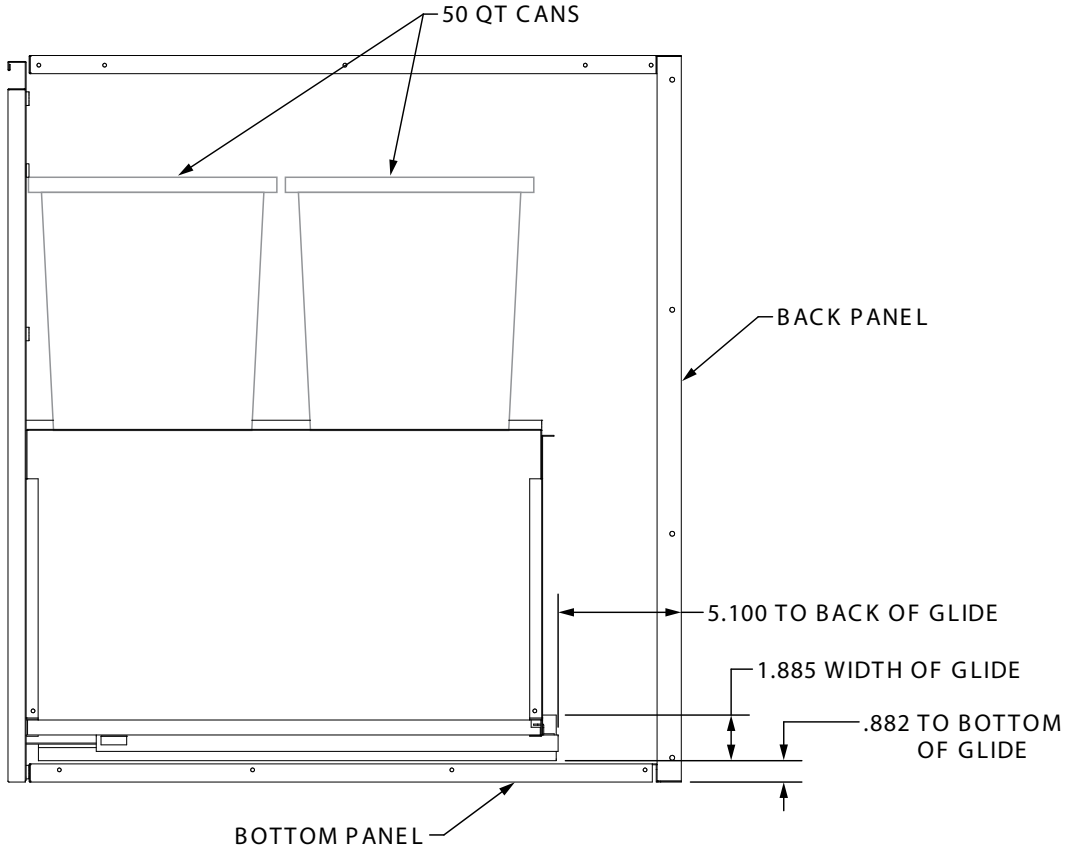

OBT2100L Cross Section Dimensions

Post and Panel System - PPS SUPPORT MID, END

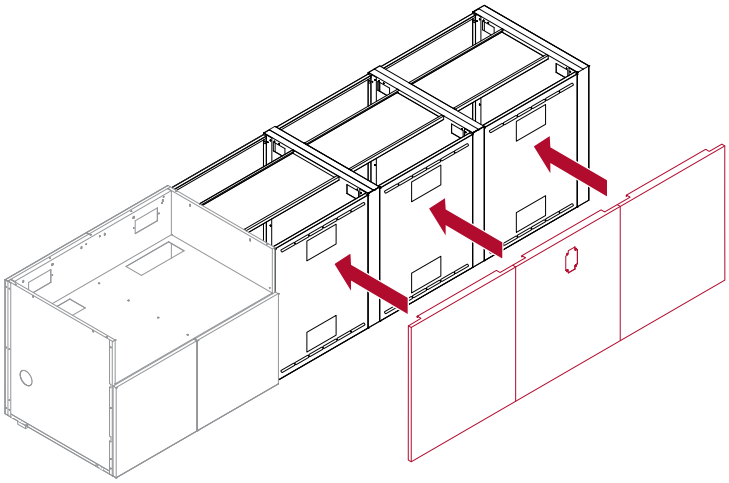

Product Description
PPS – Post and Panel System: Using a combination of supports, spacers, and panels you can create countertop space without the additional cost of doors or drawers. These parts assemble to be stand-alone units or connect with base cabinets. Ideal for multi-family spaces, the supports can also be brought down to ADA compliant height with our available ADA legs. Panels can be made to match any door style. 36"H versions of all PPS parts are available as well, with an extra option of 18"D. 36"H PPS parts are designated with a -TALL at the end of the SKU.

27" Depth SKU	Description
PPS SUPPORT MID 27	3"W x 27"D x 30"H Middle supports (unfinished, hidden from view)
PPS SUPPORT END 27	3"W x 27"D x 30"H End supports (one finished side for ending a run)
PPS SUPPORT MID 27-TALL	3"W x 27"D x 36"H Middle supports (unfinished, hidden from view)
PPS SUPPORT END 27-TALL	3"W x 27"D x 36"H End supports (one finished side for ending a run)

18" Depth SKU	Description
PPS SUPPORT MID 18-TALL	3"W x 18"D x 36"H Middle supports (unfinished, hidden from view)
PPS SUPPORT END 18-TALL	3"W x 18"D x 36"H End supports (one finished side for ending a run)

24" Depth SKU	Description
PPS SUPPORT MID 24	3"W x 24"D x 30"H Middle supports (unfinished, hidden from view)
PPS SUPPORT END 24	3"W x 24"D x 30"H End supports (one finished side for ending a run)
PPS SUPPORT MID 24-TALL	3"W x 24"D x 36"H Middle supports (unfinished, hidden from view)
PPS SUPPORT END 24-TALL	3"W x 24"D x 36"H End supports (one finished side for ending a run)

Post and Panel System - PPS SPACER

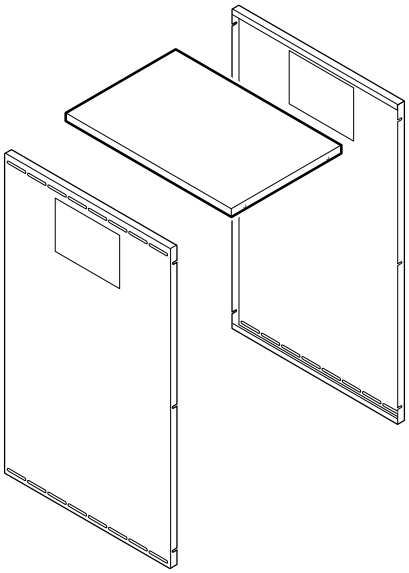

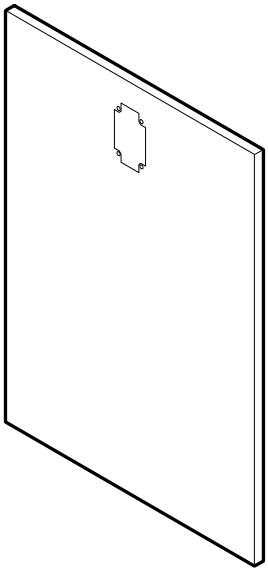

Product Description
Spacers consist of 3 panels that connect supports to each other, support to cabinet, or cabinets together. Finished panels hang over the spacers and supports for an even look, so specify panels based on total width of span. The finished panels are ¾” thick and sit flush with door/drawer fronts on cabinets as well as back panels if they are used.

Width	Spacer SKU	Panel SKU
9”W	PPS SPACER 9	PPS PANEL 9
	PPS SPACER 9-TALL	PPS PANEL 9-TALL
		PPS PANEL 9 KW
		PPS PANEL 9 KW-TALL
12”W	PPS SPACER 12	PPS PANEL 12
	PPS SPACER 12-TALL	PPS PANEL 12-TALL
		PPS PANEL 12 KW
		PPS PANEL 12 KW-TALL
15”W	PPS SPACER 15	PPS PANEL 15
	PPS SPACER 15-TALL	PPS PANEL 15-TALL
		PPS PANEL 15 KW
		PPS PANEL 15 KW-TALL
18”W	PPS SPACER 18	PPS PANEL 18
	PPS SPACER 18-TALL	PPS PANEL 18-TALL
		PPS PANEL 18 KW
		PPS PANEL 18 KW-TALL
21”W	PPS SPACER 21	PPS PANEL 21
	PPS SPACER 21-TALL	PPS PANEL 21-TALL
		PPS PANEL 21 KW
		PPS PANEL 21 KW-TALL
24”W	PPS SPACER 24	PPS PANEL 24
	PPS SPACER 24-TALL	PPS PANEL 24-TALL
		PPS PANEL 24 KW
		PPS PANEL 24 KW-TALL
27”W	PPS SPACER 27	PPS PANEL 27
	PPS SPACER 27-TALL	PPS PANEL 27-TALL
		PPS PANEL 27 KW
		PPS PANEL 27 KW-TALL
30”W	PPS SPACER 30	PPS PANEL 30
	PPS SPACER 30-TALL	PPS PANEL 30-TALL
		PPS PANEL 30 KW
		PPS PANEL 30 KW-TALL
33”W	PPS SPACER 33	PPS PANEL 33
	PPS SPACER 33-TALL	PPS PANEL 33-TALL
		PPS PANEL 33 KW
36”W	N/A	PPS PANEL 36
		PPS PANEL 36-TALL
		PPS PANEL 36 KW
		PPS PANEL 36 KW-TALL
XX” W	N/A	PPS PANEL XX (specify)

Side Burner Base Cabinets

- Side Burner bases available in widths from 12″ to 30″.
- Recommended to specify cabinet 6″ wider than the appliance being used.
- Factory installed trim kits individually designed to accommodate all manufacturers.
- OBB appliance cabinetry accommodate all electrical, plumbing and gas necessities.

*NOTE: Extra depth cabinets are not available in all sizes. Please contact: Sales@danver.com for specific needs.

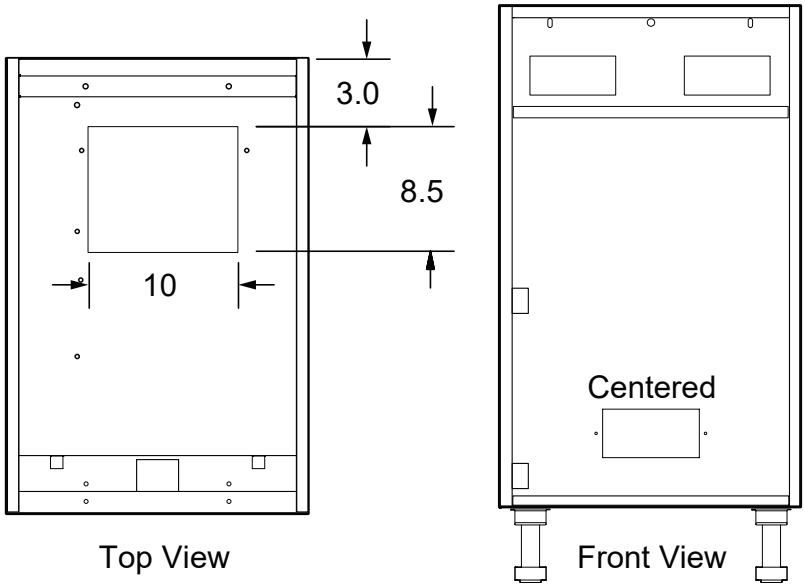

There are two side burner (OBB) cabinet styles - one placing the burner at countertop level and the recessed cabinet (LOW) placing the burner 7″ below the countertop.

The recessed cabinet offers more convenience for stock pot cooking.

The LOW cabinets have a larger trim kit than normal. The appliance cutout MUST be 7.5″ less than the cabinet width. Ex. for an OBB2702 LOW the appliance cutout must be 19.5″W or less.

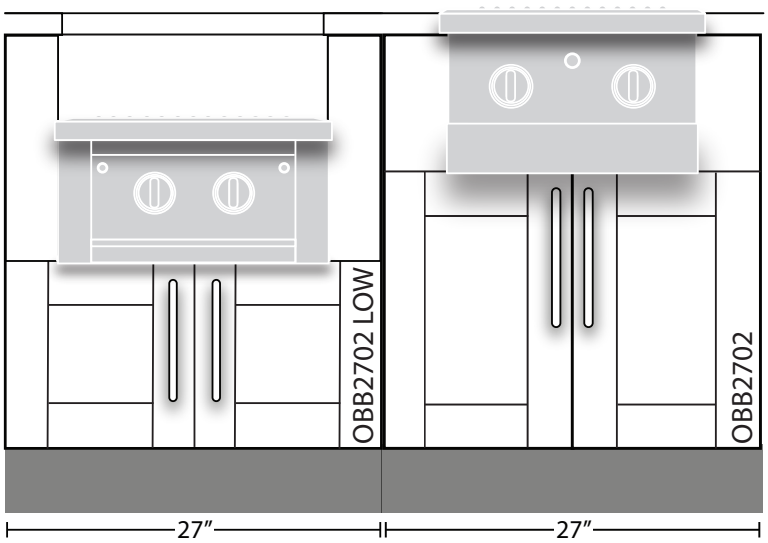

Side Burner Base - OBBxxxx: 1 Door, 2 Door, 2 Drawer

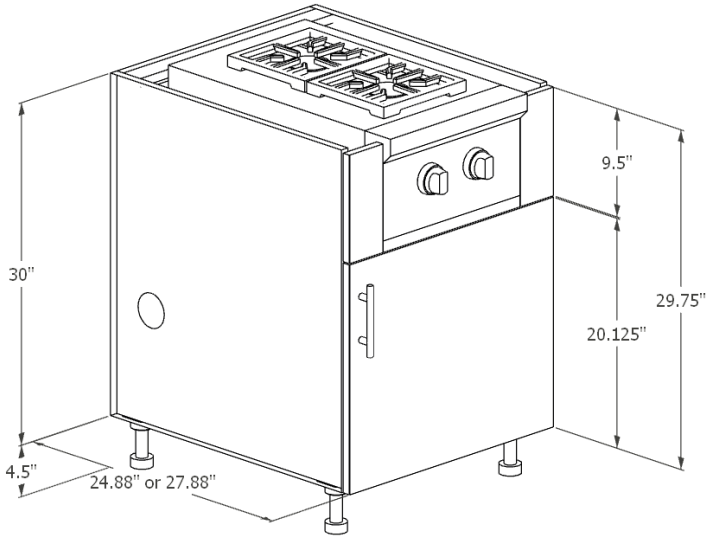

Product Description	
OBBxx01:Outdoor Side Burner Base, 1 Door. 9.75”H burner shelf (9.5”H trim kit sides)	
27” Depth SKU	24” Depth SKU
OBB1201-LH	OBB1201-24-LH
OBB1201-RH	OBB1201-24-RH
OBB1501-LH	OBB1501-24-LH
OBB1501-RH	OBB1501-24-RH
OBB1801-LH	OBB1801-24-LH
OBB1801-RH	OBB1801-24-RH
OBB2101-LH	OBB2101-24-LH
OBB2101-RH	OBB2101-24-RH
OBB2401-LH	OBB2401-24-LH
OBB2401-RH	OBB2401-24-RH

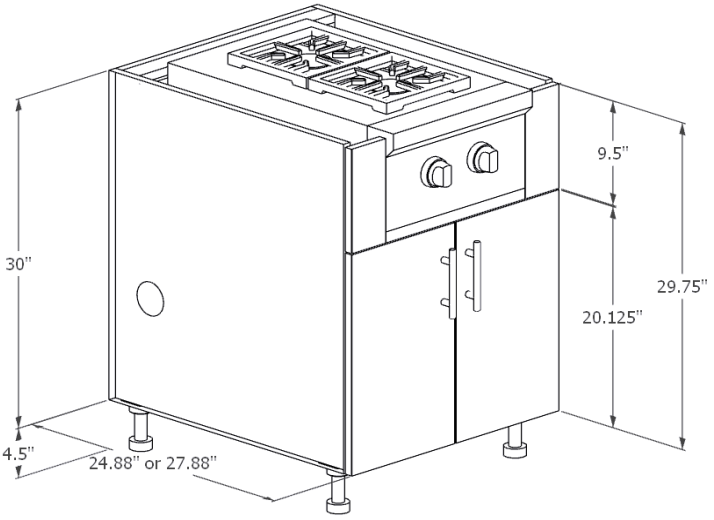

Product Description	
OBBxx02:Outdoor Side Burner Base, 2 Doors. 9.75”H burner shelf (9.5”H trim kit sides)	
27” Depth SKU	24” Depth SKU
OBB2402	OBB2402-24
OBB2702	OBB2702-24
OBB3002	OBB3002-24

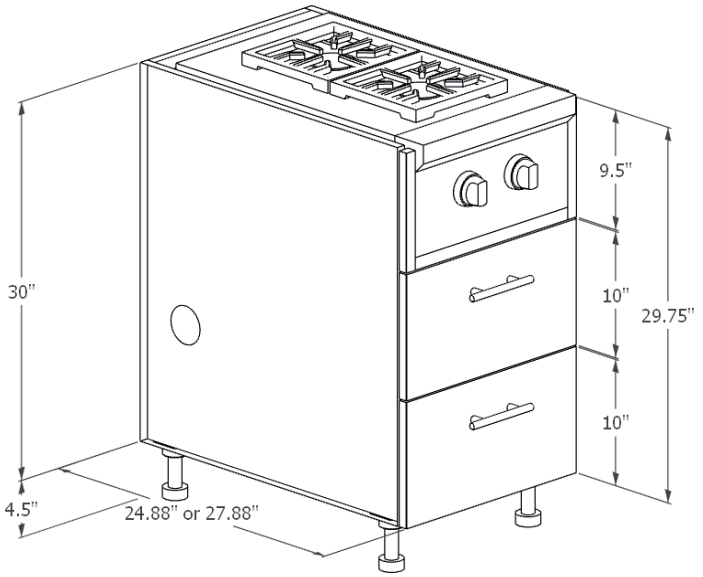

Product Description	
OBBxx20:Outdoor Side Burner Base, 2 Drawers. 9.75”H burner shelf (9.5”H trim kit sides)	
27” Depth SKU	24” Depth SKU
OBB1220	OBB1220-24
OBB1520	OBB1520-24
OBB1820	OBB1820-24
OBB2120	OBB2120-24
OBB2420	OBB2420-24
OBB2720	OBB2720-24
OBB3020	OBB3020-24

Side Burner Base - 11”H Shelf: OBBxxxxD

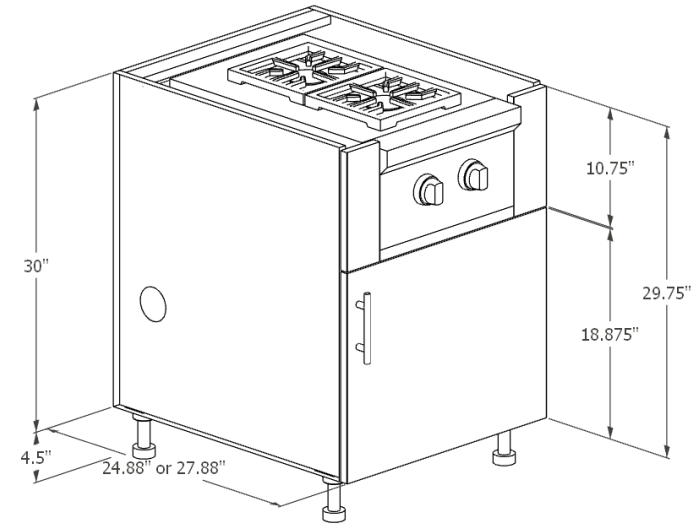

Product Description	
OBBxx01D: Outdoor Side Burner Base, Deep, 1 Door. 11”H burner shelf (10.75”H trim kit sides)	
27” Depth SKU	24” Depth SKU
OBB1201D-LH	OBB1201D-24-LH
OBB1201D-RH	OBB1201D-24-RH
OBB1501D-LH	OBB1501D-24-LH
OBB1501D-RH	OBB1501D-24-RH
OBB1801D-LH	OBB1801D-24-LH
OBB1801D-RH	OBB1801D-24-RH
OBB2401D-LH	OBB2401D-24-LH
OBB2401D-RH	OBB2401D-24-RH

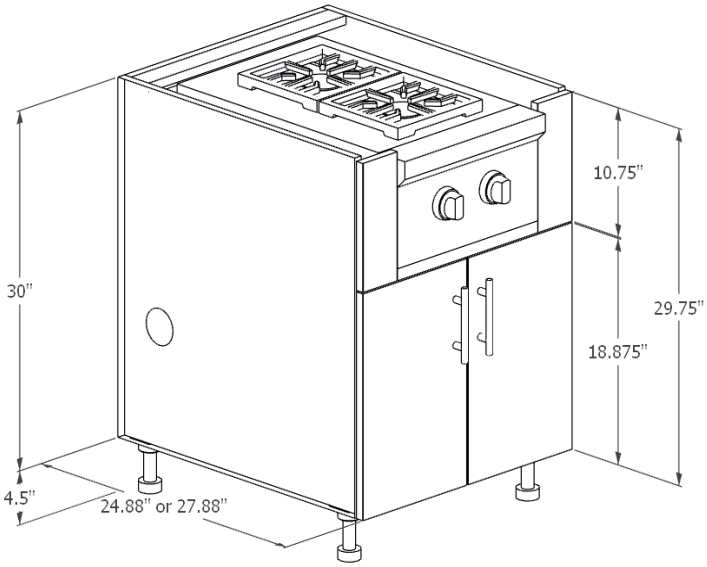

Product Description	
OBBxx02D:Outdoor Side Burner Base, Deep, 2 Doors. 11”H burner shelf (10.75”H trim kit sides)	
27” Depth SKU	24” Depth SKU
OBB2402D	OBB2402D-24
OBB2702D	OBB2702D-24
OBB3002D	OBB3002D-24

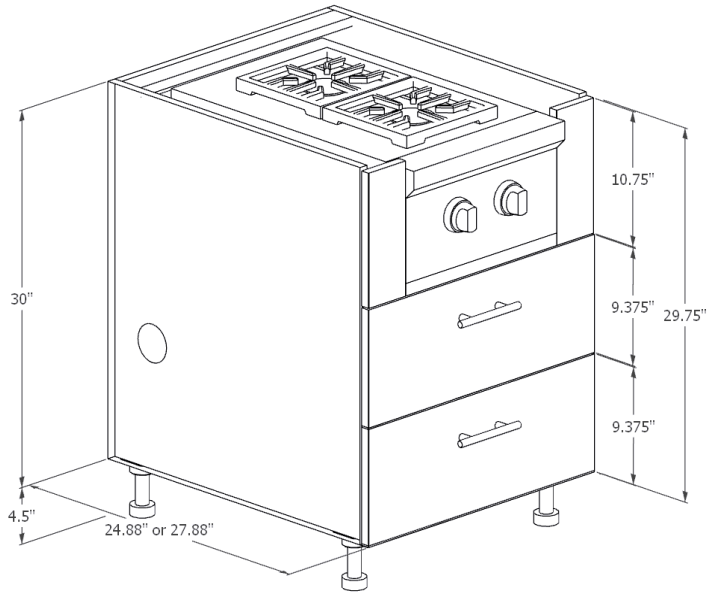

Product Description	
OBBxx20D:Outdoor Side Burner Base, Deep, 2 Drawers. 11”H burner shelf (10.75”H trim kit sides)	
27” Depth SKU	24” Depth SKU
OBB1220D	N/A
OBB1520D	N/A
OBB1820D	N/A
OBB2120D	N/A
OBB2420D	N/A
OBB2720D	N/A
OBB3020D	N/A

Side Burner Base - 12.5”H Shelf: OBBxx01W, OBBxx02W

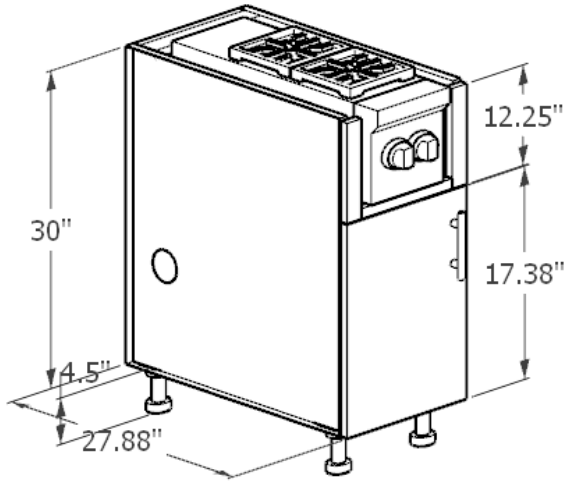

Product Description	
OBBxx01W: Outdoor Side Burner Base, 1 Door. 12.5”H burner shelf (12.25”H trim kit sides)	
27” Depth SKU	24” Depth SKU
OBB1201W-LH	N/A
OBB1201W-RH	N/A
OBB1501W-LH	N/A
OBB1501W-RH	N/A
OBB1801W-LH	N/A
OBB1801W-RH	N/A
OBB2101W-LH	N/A
OBB2101W-RH	N/A
OBB2401W-LH	N/A
OBB2401W-RH	N/A

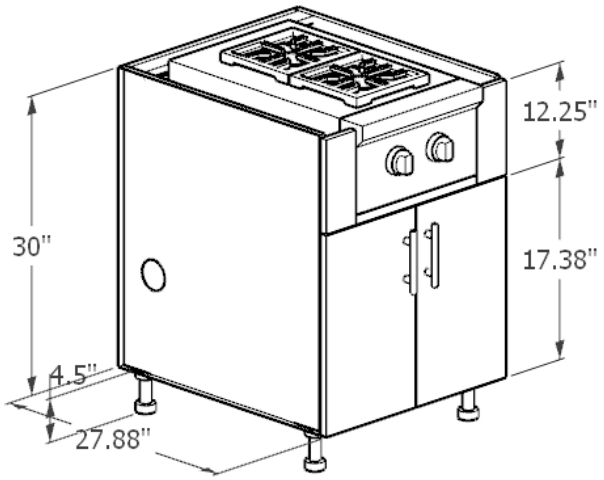

Product Description	
OBBxx02W:Outdoor Side Burner Base, 2 Doors. 12.5”H burner shelf (12.25”H trim kit sides)	
27” Depth SKU	24” Depth SKU
OBB2402W	N/A
OBB2702W	N/A
OBB3002W	N/A

Side Burner Base - 15.5”H Shelf: OBBxx01 LOW, OBBxx02 LOW

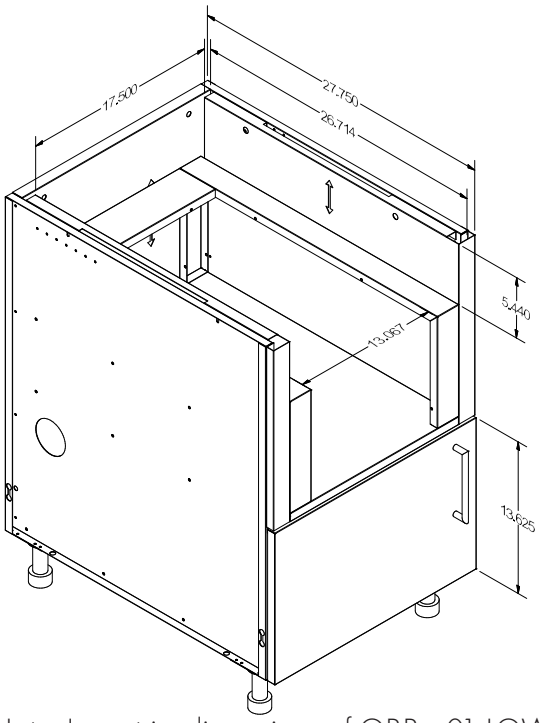

Note: Inner trim dimensions of OBBxx01 LOW adjust based on the power burner selected.

Product Description	
OBBxx01 LOW: Outdoor Side Burner Base, Low shelf design, 1 Door. 15.50” high burner shelf (16”H trim kit sides)	
27” Depth SKU	24” Depth SKU
OBB1801-RH LOW	OBB1801-24-RH LOW
OBB1801-LH LOW	OBB1801-24-LH LOW
OBB2101-RH LOW	OBB2101-24-RH LOW
OBB2101-LH LOW	OBB2101-24-LH LOW
OBB2401-RH LOW	OBB2401-24-RH LOW
OBB2401-LH LOW	OBB2401-24-LH LOW

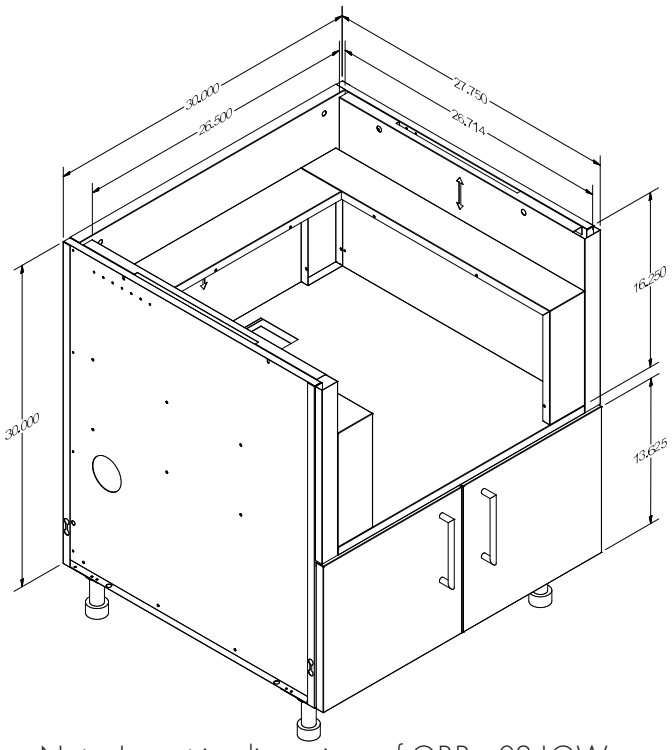

Note: Inner trim dimensions of OBBxx02 LOW adjust based on power burner selected.

Product Description	
OBBxx02 LOW: Outdoor Side Burner Base, Low shelf design, 2 Doors. 15.50” high burner shelf (16”H trim kit sides)	
27” Depth SKU	24” Depth SKU
OBB2402 LOW	OBB2402-24 LOW
OBB2702 LOW	OBB2702-24 LOW
OBB3002 LOW	OBB3002-24 LOW

Bartending Center Cabinets - OBCxx01 and OBCxx02

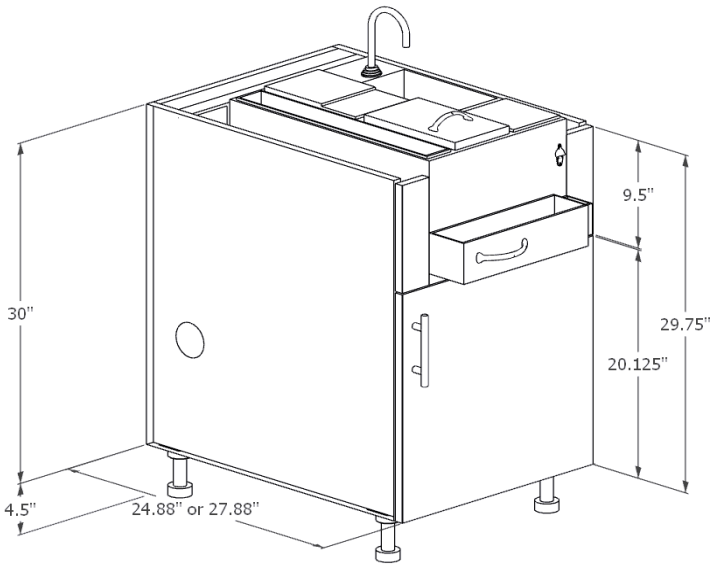

Product Description	
OBCxx01:Outdoor Bartending Center Base, 1 Door. 9.75”H appliance shelf (9.5”H trim kit sides)	
27” Depth SKU	24” Depth SKU
OBC1501-LH	OBC1501-24-LH
OBC1501-RH	OBC1501-24-RH
OBC1801-LH	OBC1801-24-LH
OBC1801-RH	OBC1801-24-RH
OBC2101-LH	OBC2101-24-LH
OBC2101-RH	OBC2101-24-RH
OBC2401-LH	OBC2401-24-LH
OBC2401-RH	OBC2401-24-RH

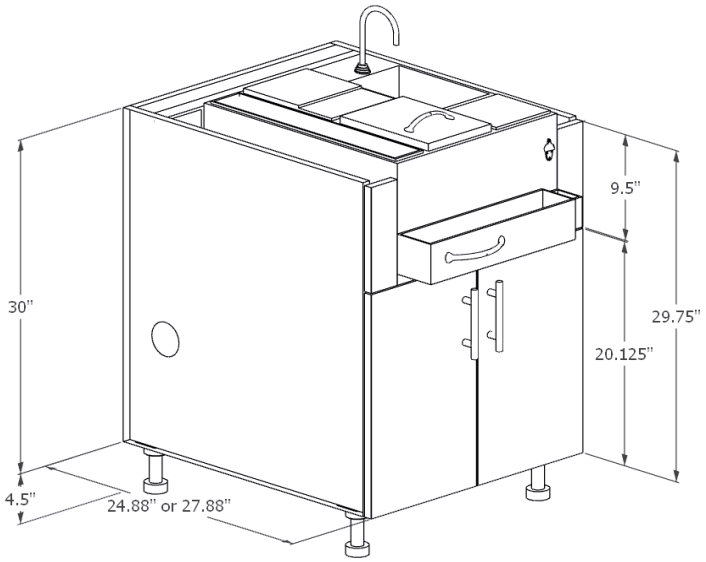

Product Description	
OBCxx02:Outdoor Bartending Center Base, Deep, 2 Doors. 9.75”H appliance shelf (9.5”H trim kit sides)	
27” Depth SKU	24” Depth SKU
OBC2402	OBC2402-24
OBC2702	OBC2702-24
OBC3002	OBC3002-24
OBC3302	OBC3302-24
OBC3602	OBC3602-24
OBC3902	OBC3902-24

Bartending Center Cabinets - 11”H Shelf: OBCxx01D, OBCxx02D

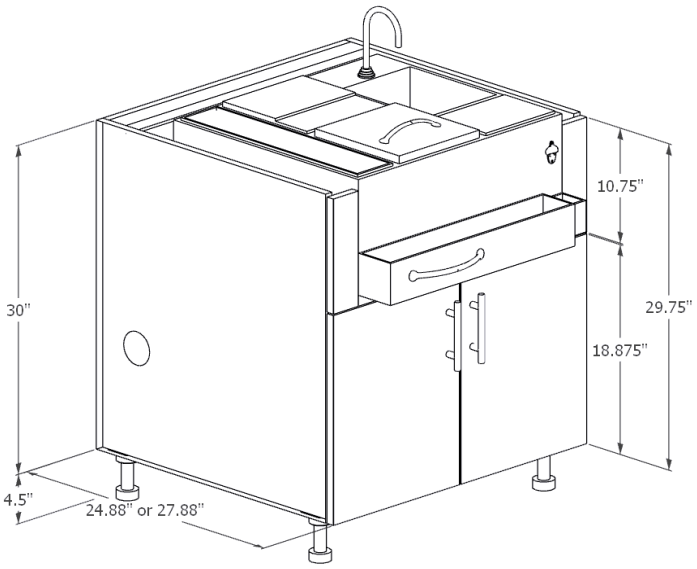

Product Description	
OBCxx01D:Outdoor Bartending Center Base, Deep, 1 Door. 11”H appliance shelf (10.75”H trim kit sides)	
27” Depth SKU	24” Depth SKU
OBC1501D-LH	OBC1501D-24-LH
OBC1501D-RH	OBC1501D-24-RH
OBC1801D-LH	OBC1801D-24-LH
OBC1801D-RH	OBC1801D-24-RH
OBC2101D-LH	OBC2101D-24-LH
OBC2101D-RH	OBC2101D-24-RH
OBC2401D-LH	OBC2401D-24-LH
OBC2401D-RH	OBC2401D-24-RH

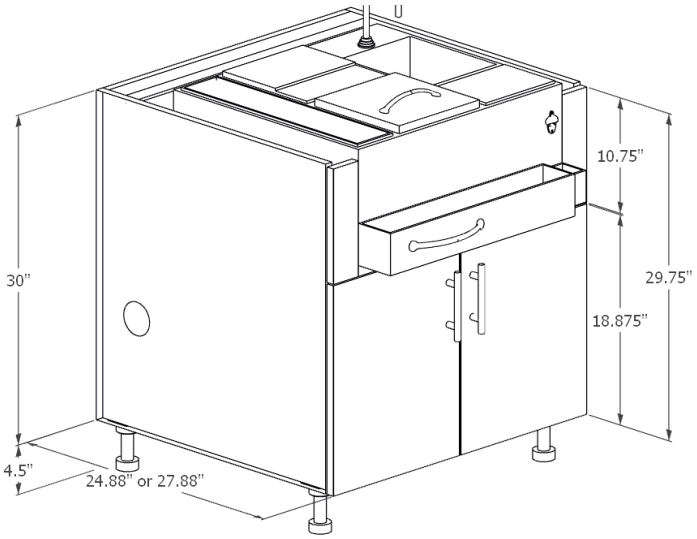

Product Description	
OBCxx02D:Outdoor Bartending Center Base, Deep, 2 Doors. 11”H appliance shelf (10.75”H trim kit sides)	
27” Depth SKU	24” Depth SKU
OBC2402D	OBC2402D-24
OBC2702D	OBC2702D-24
OBC3002D	OBC3002D-24
OBC3302D	OBC3302D-24
OBC3602D	OBC3602D-24
OBC3902D	OBC3902D-24

Warming Drawer Bases - OBWxx02, OBWxx10

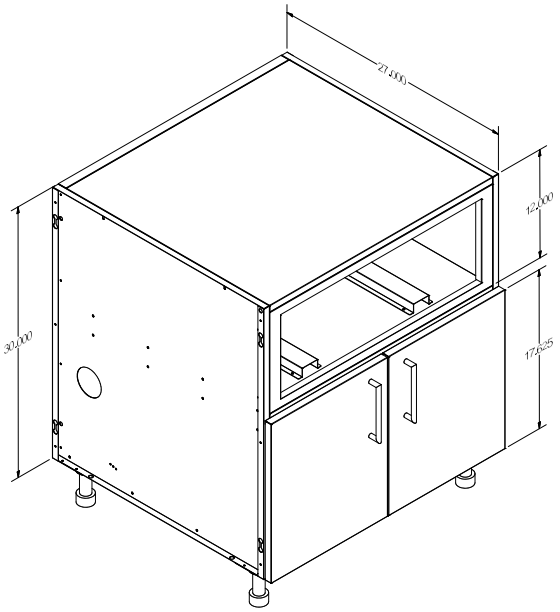

Product Description	
OBWxx02: Outdoor Warming Drawer Base, 2 Doors.	
27” Depth SKU	24” Depth SKU
OBW3002	OBW3002-24
OBW3302	OBW3302-24
OBW3602	OBW3602-24

Note: OBW30xx's are made for 27" wide warming drawers.

OBW36xx's accomodate 33" wide warming drawers.

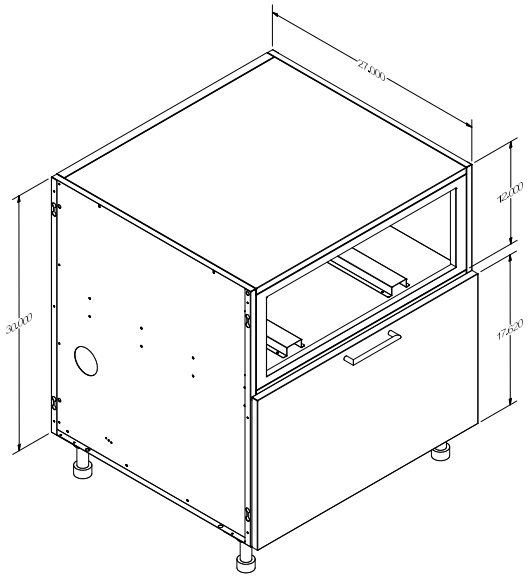

Product Description	
OBWxx10: Outdoor Warming Drawer Base, 1 Drawer.	
27” Depth SKU	24” Depth SKU
OBW3010	OBW3010-24
OBW3310	OBW3310-24
OBW3610	OBW3610-24

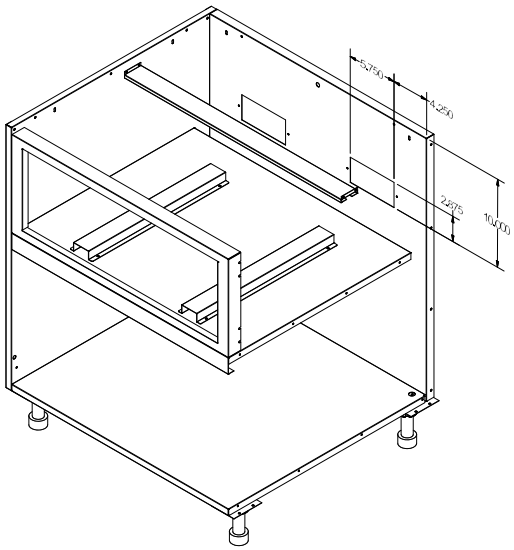

Warming Drawer Bases - OBWxx10 DCS

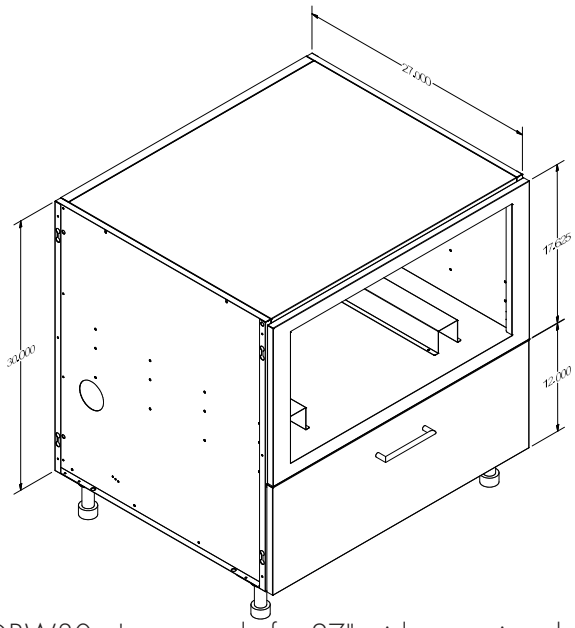

Product Description	
OBWxx10: Outdoor Warming Drawer Base, extra deep 17.63" cutout for DCS or similar. 1 Drawer.	
27” Depth SKU	24” Depth SKU
OBW3010 DCS	N/A
OBW3310 DCS	N/A
OBW3610 DCS	N/A

Note: OBW30xx's are made for 27" wide warming drawers.

OBW36xx's accomodate 33" wide warming drawers.

Warming Drawer Bases - OBWxx02D, OBWxx10D

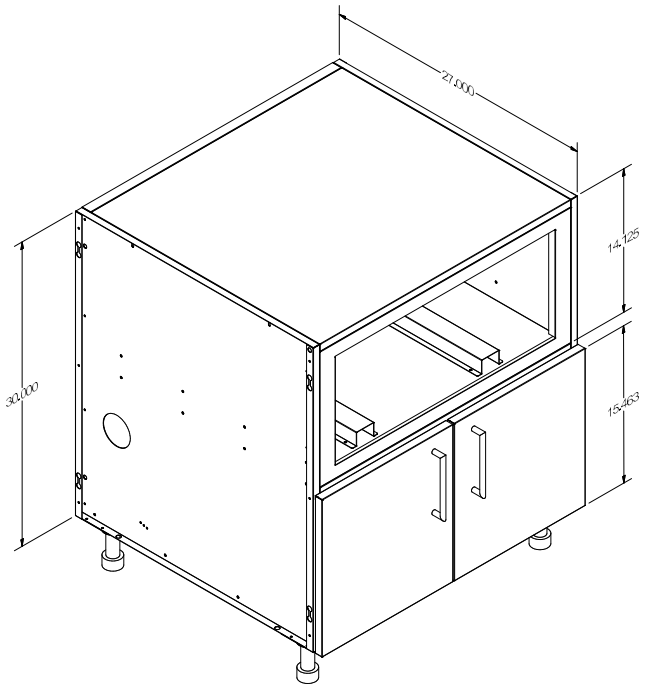

Product Description	
OBWxx02D: Outdoor Warming Drawer Base, Deep, 2 Doors.	
27” Depth SKU	24” Depth SKU
OBW3002D	OBW3002D-24
OBW3302D	OBW3302D-24
OBW3602D	OBW3602D-24

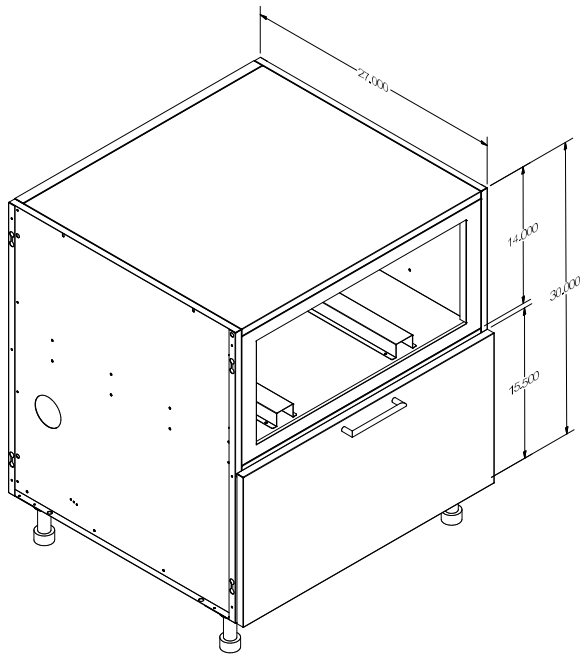

Product Description	
OBWxx10D: Outdoor Warming Drawer Base, Deep, 1 Drawer.	
27” Depth SKU	24” Depth SKU
OBW3010D	OBW3010D-24
OBW3310D	OBW3310D-24
OBW3610D	OBW3610D-24

Egg Base Cabinets - OEBxx02 H16.5, OEBxx02 H12.5

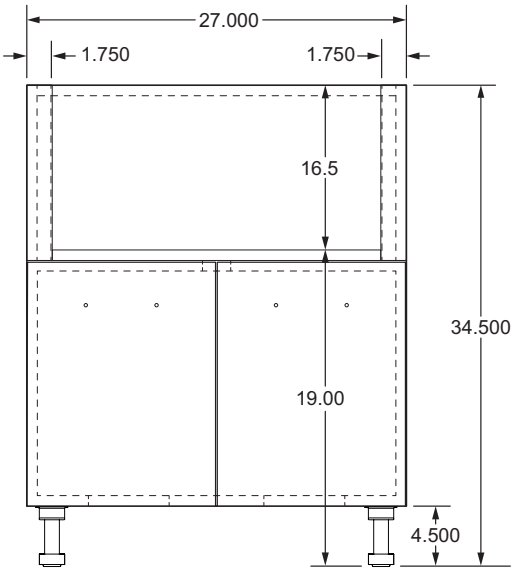

Product Description	
OEBxx02 H16.5: Outdoor Egg Smoker Base, 2 Doors. *Shelf is 16.5" from top of cabinet*	
27” Depth SKU	24” Depth SKU
OEB2702 H16.5	OEB2702-24 H16.5
OEB3302 H16.5	OEB3302-24 H16.5

Note: OEB Cabinets have additional support for the weight of the smoker grill eggs (over 200lbs.).

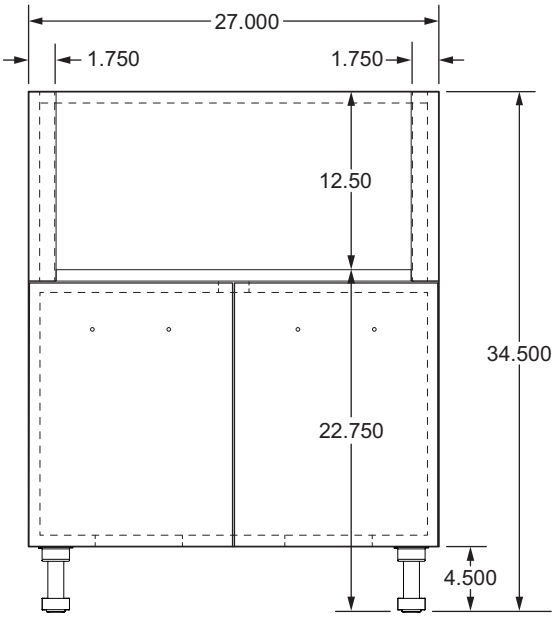

Product Description	
OEBxx02 H12.5: Outdoor Egg Smoker Base, 2 Doors. *Shelf is 12.5" from top of cabinet*	
27” Depth SKU	24” Depth SKU
OEB2702 H12.5	OEB2702-24 H12.5
OEB3302 H12.5	OEB3302-24 H12.5

Note: OEB Cabinets have additional support for the weight of the smoker grill eggs (over 200lbs.).

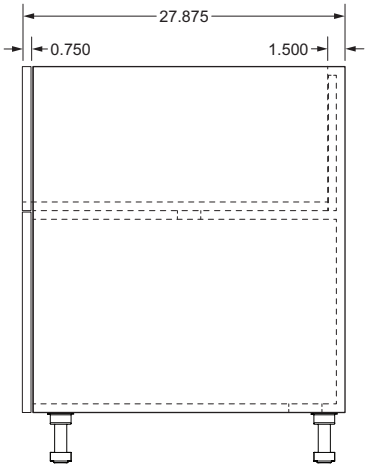

EXAMPLE:
OEB2702 and OEB3302 side elevation measurements.

Egg Base Cabinets - Extra Large, Diagonal Corner: DCBxx

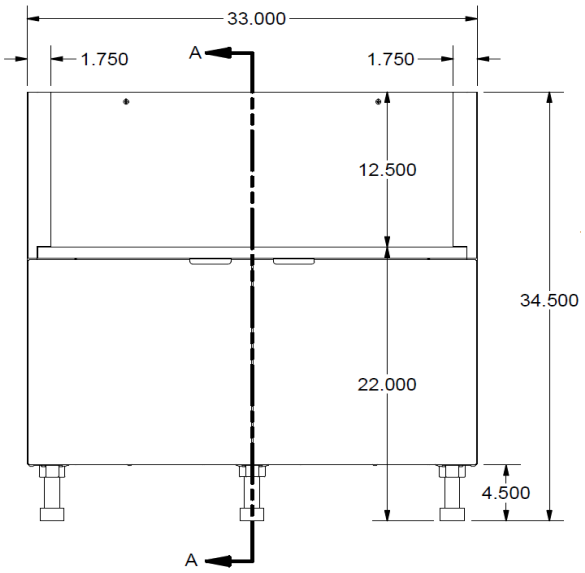

Product Description	
OEB3302-35 H12.5: Outdoor Egg Smoker Base, 2 Doors. *35”D TO FIT BIG GREEN EGG XL, 2XL WILL NOT FIT!* Shelf is 12.5" from top of cabinet* This base comes with OFE APPLIANCE finished sides due to the cabinet most likely sitting forward from the rest of the run.	
27” Depth SKU	24” Depth SKU
OEB3302-35 H16.5	N/A
OEB3302-35 H12.5	N/A

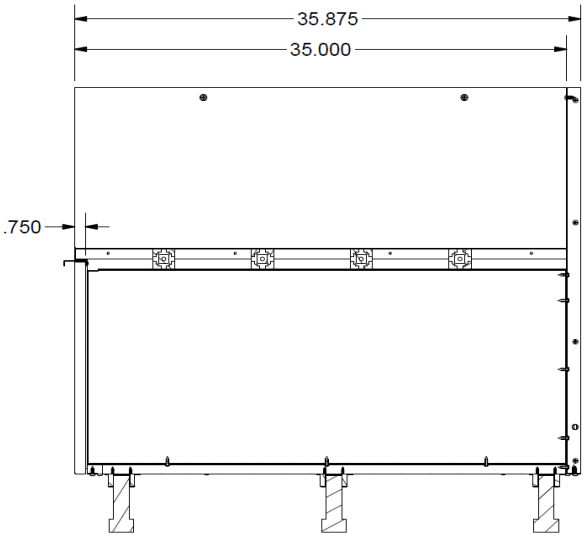

SECTION A-A

Product Description	
DCBxx H16.5: Diagonal Corner Egg Smoker Base, 1 Door. *Shelf is 16.5" from top of cabinet*	
27” Depth SKU	24” Depth SKU
DCB39 H16.5-LH	DCB36 H16.5-LH
DCB39 H16.5-RH	DCB36 H16.5-RH

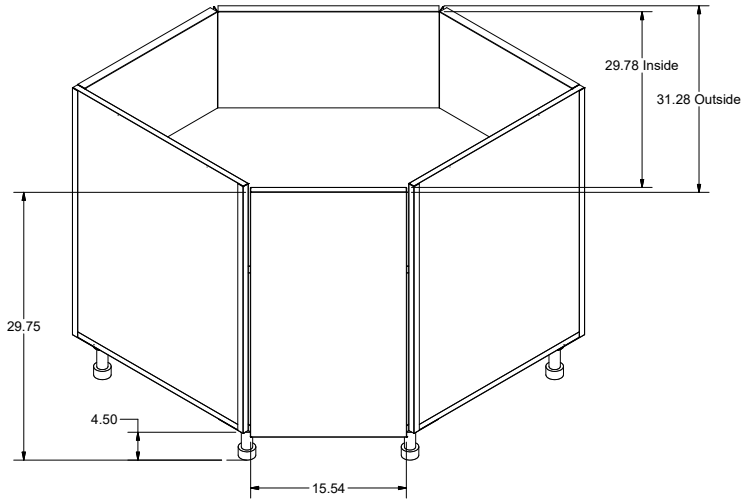

DCB36

Product Description	
DCBxx H12.5: Diagonal Corner Egg Smoker Base, 1 Door. *Shelf is 12.5" from top of cabinet*	
27” Depth SKU	24” Depth SKU
DCB39 H12.5-LH	DCB36 H12.5-LH
DCB39 H12.5-RH	DCB36 H12.5-RH

Grill Cabinets - Grill Cabinets - OGBxxxx

- Available in widths from 30″ - 62″.
- Factory installed trim kits individually designed to accommodate all grill manufacturers.
- Cabinets available for additional cooking appliances such as cooktops, EVO grills, and pizza ovens.
- Specify cabinet 6″ larger than the grill being used.
- Wolf, Twin Eagles, and Fire Magic grills require a deeper cutout and shelf (11"H). This is denoted with a “D” suffix. Example: OGB4802D.
- Wilmington grills require a deeper cutout and shelf (12.5"H). This is denoted with a "W" suffix. Example: OGB4802W. This shelf height is needed with a .75" countertop and a deep grill listed above.
- Hasty Bake grills require a deeper cutout and shelf (18.5"H) This is denoted with a "HB" suffix.

*NOTE: Extra depth cabinets are not available in all sizes. Please contact: Sales@danver.com for specific needs.

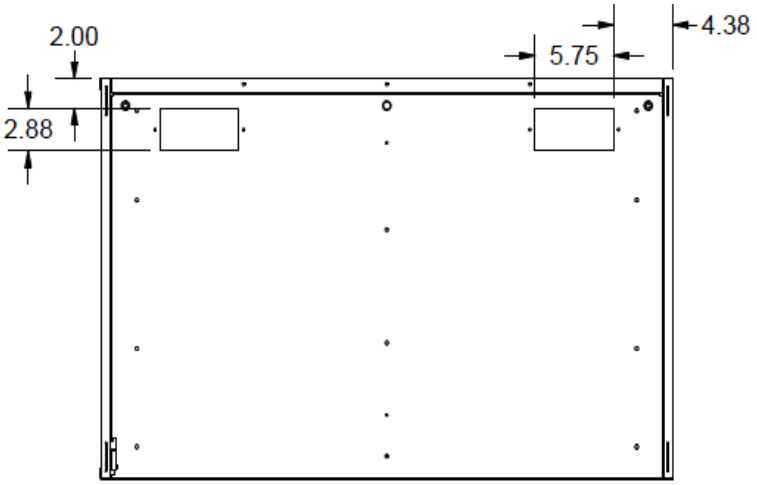

Top View

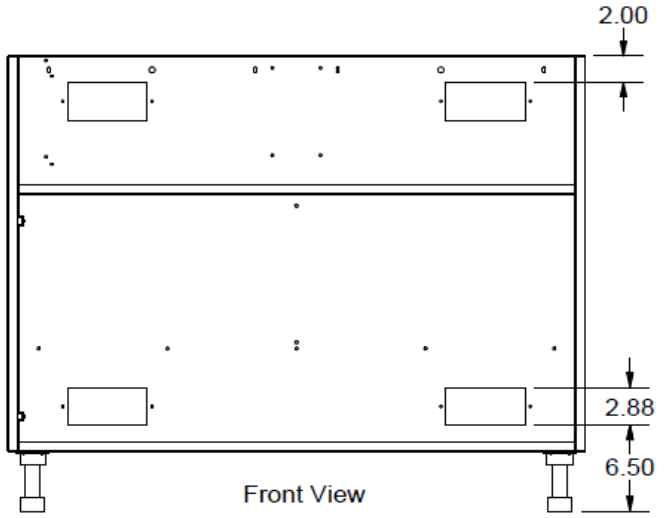

Front View

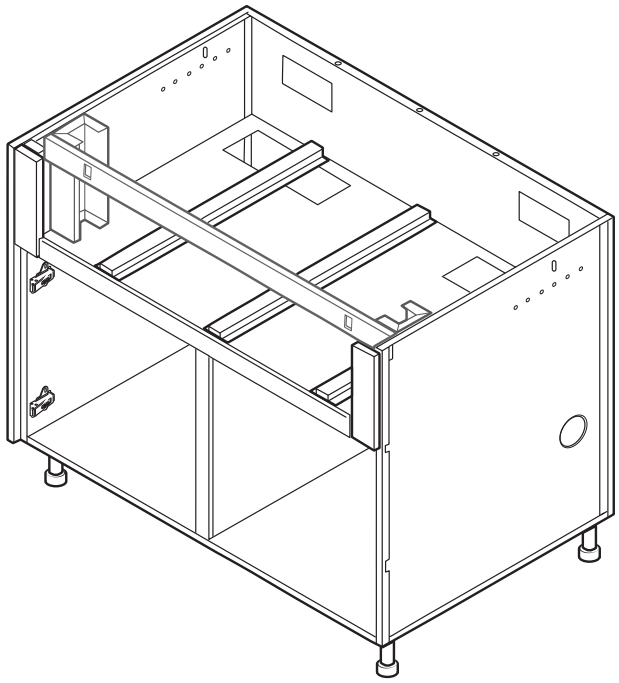

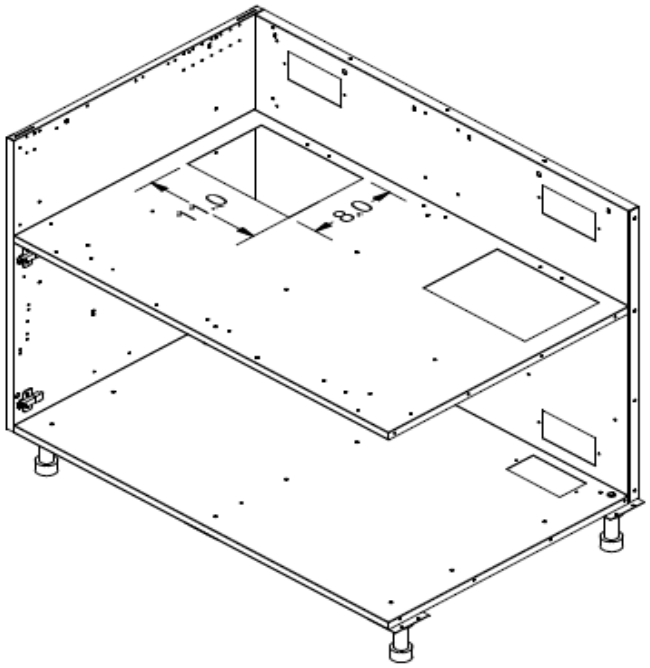

Grill Cabinets - Doors: OGBxx02, OGBxx03

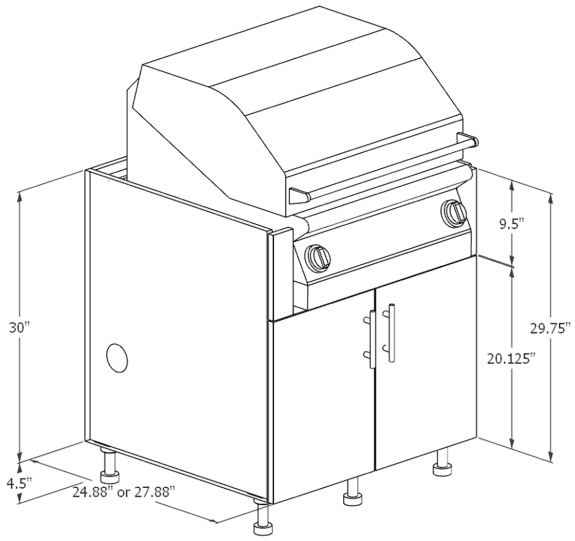

Product Description	
OGBxx02: Outdoor Grill Base, 2 Doors. 9.75”H grill shelf (9.5”H trim kit sides)	
27” Depth SKU	24” Depth SKU
OGB3002	OGB3002-24
OGB3302	OGB3302-24
OGB3602	OGB3602-24
OGB4202	OGB4202-24
OGB4502	OGB4502-24
OGB4802	OGB4802-24

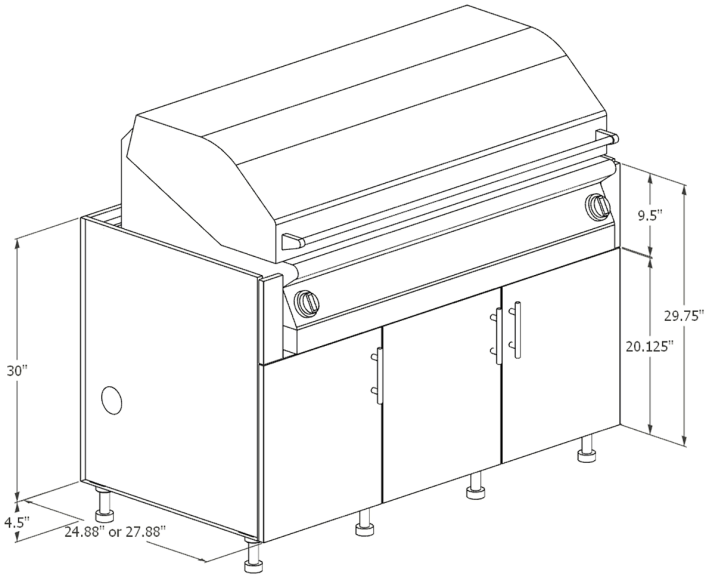

Product Description	
OGBxx03: Outdoor Grill Base, 3 Doors. 9.75”H grill shelf (9.5”H trim kit sides)	
27” Depth SKU	24” Depth SKU
OGB5403	OGB5403-24
OGB5803	OGB5803-24
OGB6203	OGB6203-24

Grill Cabinets - Drawers/Doors: OGBxx21, OGBxx22, OGBxx41

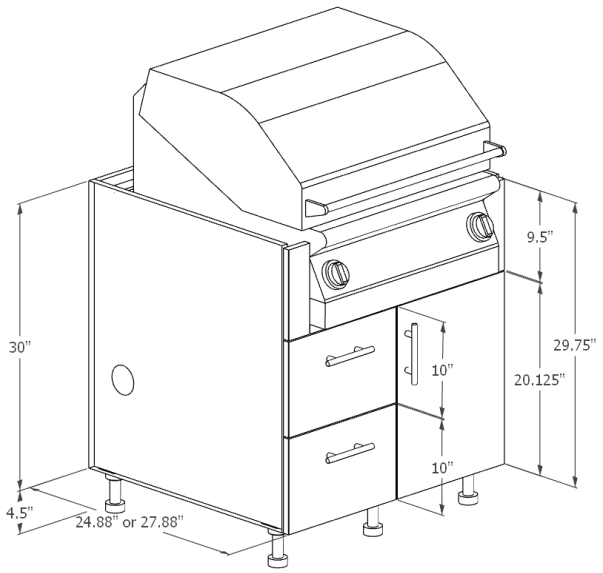

Product Description	
OGBxx21: Outdoor Grill Base, 2 Drawers, 1 Door. 9.75”H grill shelf (9.5”H trim kit sides)	
27” Depth SKU	24” Depth SKU
OGB3021	OGB3021-24
OGB3321	OGB3321-24
OGB3621	OGB3621-24
OGB4221	OGB4221-24
OGB4821	OGB4821-24

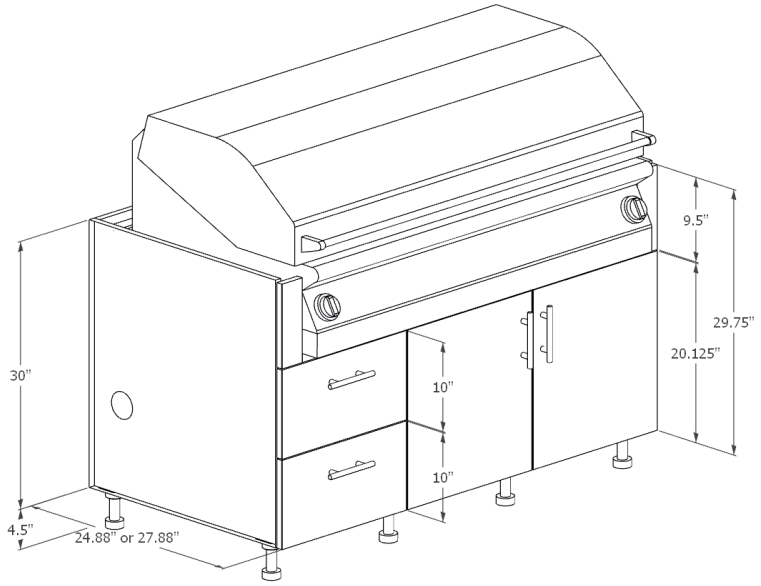

Product Description	
OGBxx22: Outdoor Grill Base 2 Drawers, 2 Doors. 9.75”H grill shelf (9.5”H trim kit sides)	
27” Depth SKU	24” Depth SKU
OGB5422	OGB5422-24
OGB5822	OGB5822-24
OGB6222	OGB6222-24

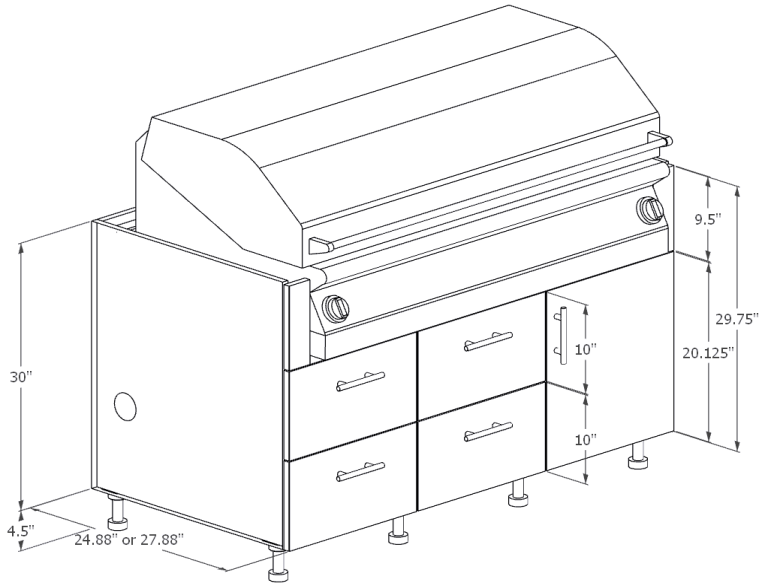

Product Description	
OGBxx41: Outdoor Grill Base, 4 Drawers, 1 Door. 9.75”H grill shelf (9.5”H trim kit sides)	
27” Depth SKU	24” Depth SKU
OGB5441	OGB5441-24
OGB5841	OGB5841-24
OGB6241	OGB6241-24

Grill Cabinets - Full-Height Drawers: OGBxx20, OGBxx30

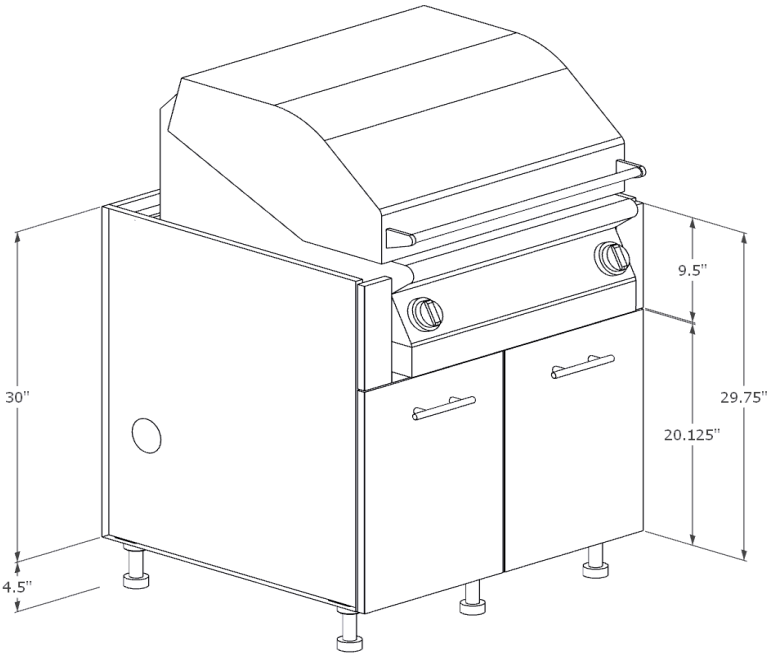

Product Description	
OGBxx20: Outdoor Grill Base, 2 Full-Height Drawers. 9.75"H grill shelf (9.5"H trim kit sides)	
27" Depth SKU	24" Depth SKU
OGB3020	OGB3020-24
OGB3320	OGB3320-24
OGB3620	OGB3620-24
OGB3920	OGB3920-24
OGB4220	OGB4220-24
OGB4520	OGB4520-24
OGB4820	OGB4820-24

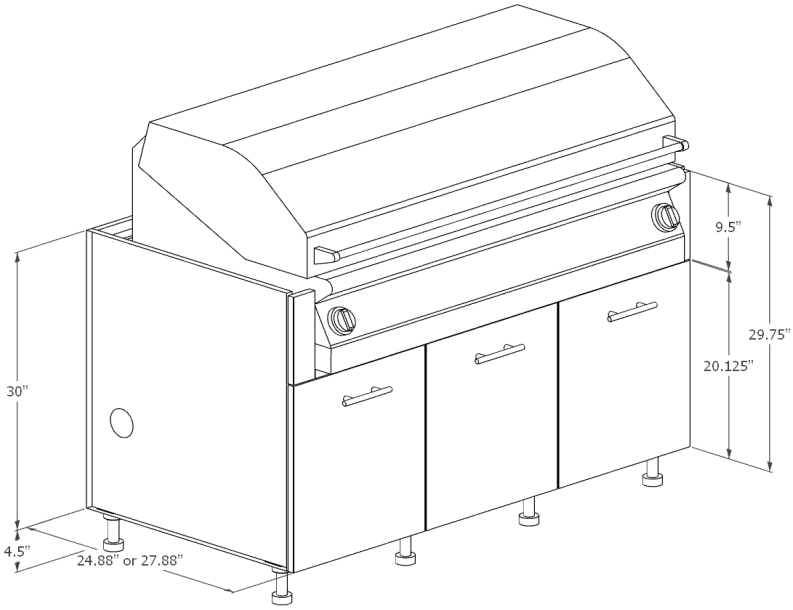

Product Description	
OGBxx30: Outdoor Grill Base, 3 Full-Height Drawers. 9.75"H grill shelf (9.5"H trim kit sides)	
27" Depth SKU	24" Depth SKU
OGB5430	OGB5430-24
OGB5830	OGB5830-24
OGB6230	OGB6230-24

Grill Cabinets - Drawers: OGBxx40, OGBxx60

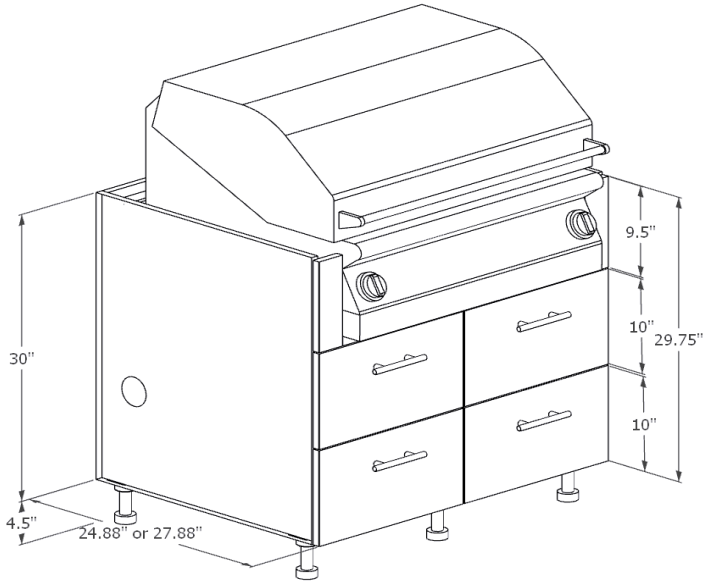

Product Description	
OGBxx40: Outdoor Grill Base, 4 Drawers. 9.75”H grill shelf (9.5”H trim kit sides)	
27” Depth SKU	24” Depth SKU
OGB3640	OGB3640-24
OGB3940	OGB3940-24
OGB4240	OGB4240-24
OGB4540	OGB4540-24
OGB4840	OGB4840-24

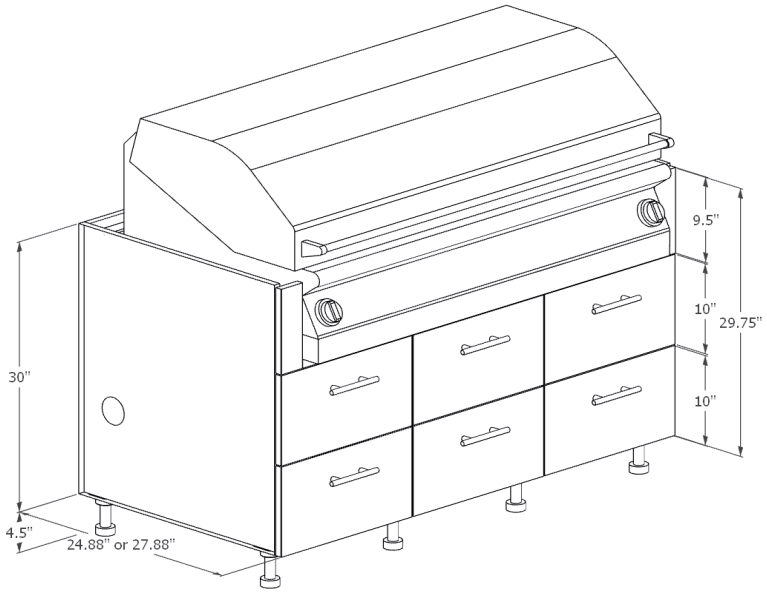

Product Description	
OGBxx60: Outdoor Grill Base, 6 Drawers. 9.75”H grill shelf (9.5”H trim kit sides)	
27” Depth SKU	24” Depth SKU
OGB5460	OGB5460-24
OGB5860	OGB5860-24
OGB6260	OGB6260-24

Grill Cabinets - EVO: OGBxxxx-EVO

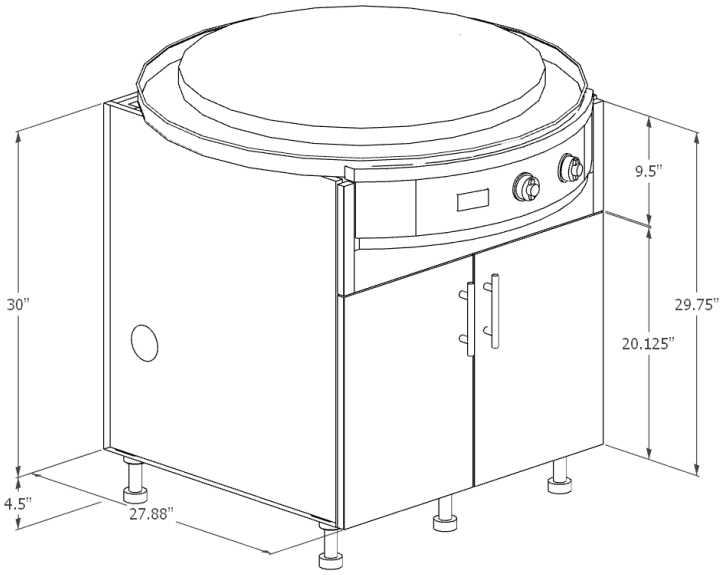

Product Description	
OGBxx02-EVO: Outdoor Grill Base, 2 Doors. 9.75”H grill shelf (9.5”H trim kit sides),*countertop thickness must be 1.25”H*	
27” Depth SKU	24” Depth SKU
OGB3302-EVO	N/A
OGB3602-EVO	N/A
OGB3902-EVO	N/A
OGB4202-EVO	N/A

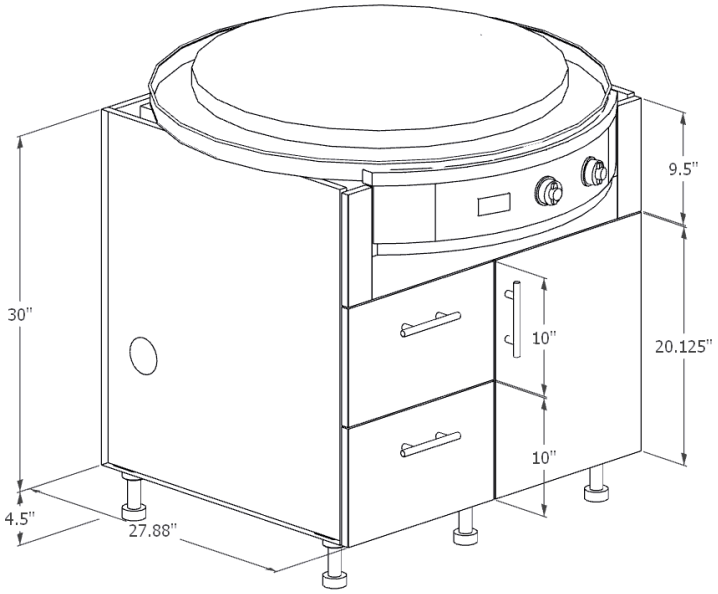

Product Description	
OGBxx21-EVO:Outdoor Grill Base, 2 Drawers, 1 Door. 9.75”H grill shelf (9.5”H trim kit sides),*countertop thickness must be 1.25”H*	
27” Depth SKU	24” Depth SKU
OGB3321-EVO	N/A
OGB3621-EVO	N/A
OGB3921-EVO	N/A
OGB4221-EVO	N/A

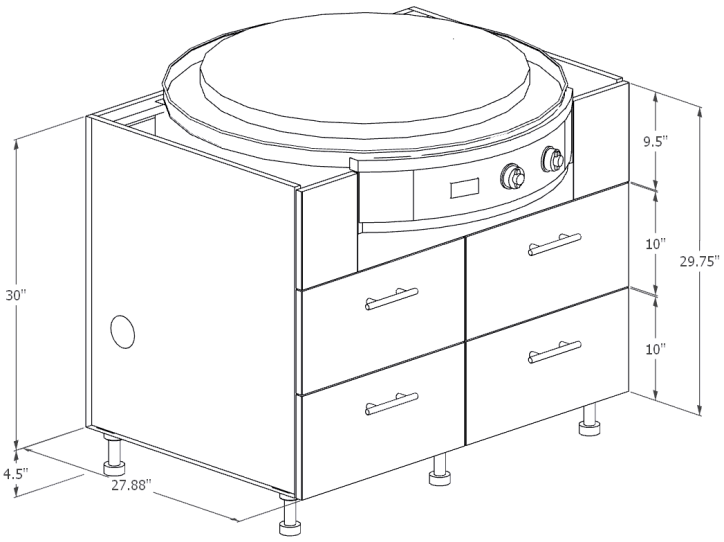

Product Description	
OGBxx40-EVO:Outdoor Grill Base, 4 Drawers. 9.75”H grill shelf (9.5”H trim kit sides),*countertop thickness must be 1.25”H*	
27” Depth SKU	24” Depth SKU
OGB3340-EVO	N/A
OGB3640-EVO	N/A
OGB3940-EVO	N/A
OGB4240-EVO	N/A

Grill Cabinets - 11"H Shelf: OGBxx02D, OGBxx03D

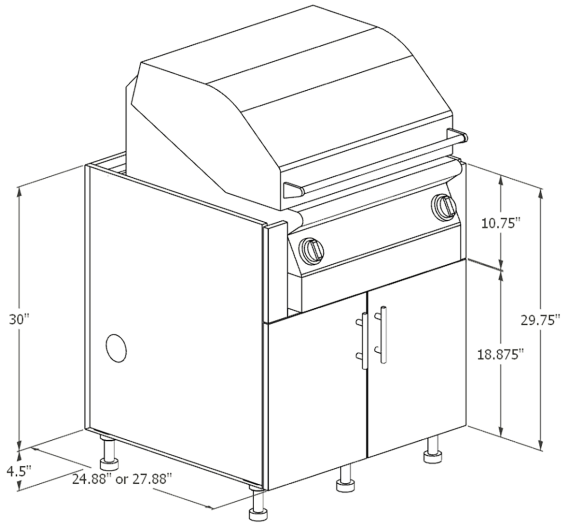

Product Description	
OGBxx02D: Outdoor Grill Base, 2 Doors, Deep. 11”H grill shelf (10.75”H trim kit sides)	
27” Depth SKU	24” Depth SKU
OGB3002D	OGB3002D-24
OGB3302D	OGB3302D-24
OGB3602D	OGB3602D-24
OGB4202D	OGB4202D-24
OGB4802D	OGB4802D-24

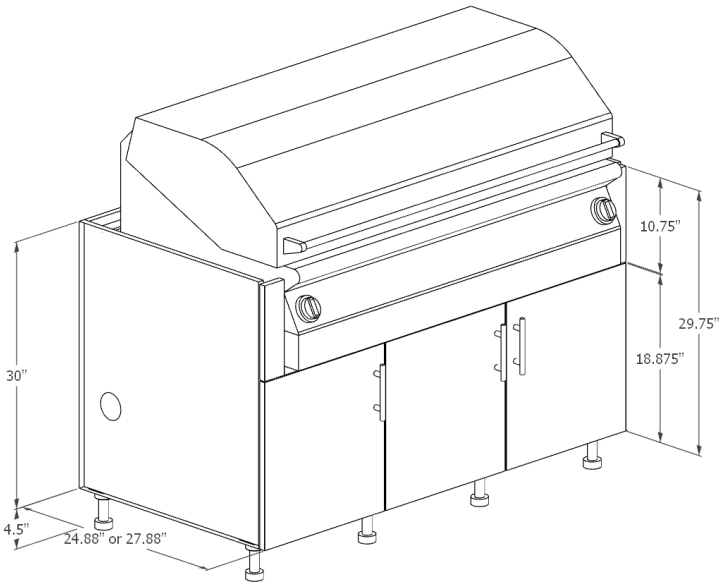

Product Description	
OGBxx03D: Outdoor Grill Base, 3 Doors, Deep. 11”H grill shelf (10.75”H trim kit sides)	
27” Depth SKU	24” Depth SKU
OGB5403D	OGB5403D-24
OGB5803D	OGB5803D-24
OGB6203D	OGB6203D-24

Grill Cabinets - 11"H Shelf: OGBxx40D, OGBxx60D

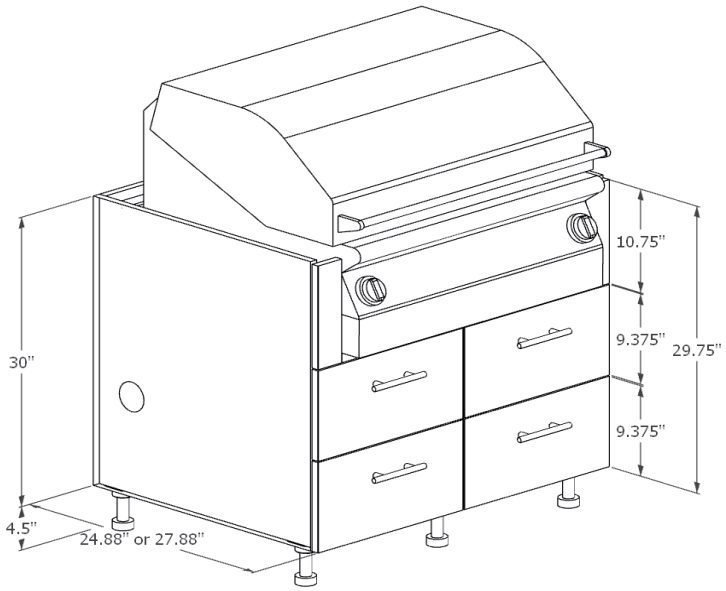

Product Description	
OGBxx40D: Outdoor Grill Base, 4 Drawers, Deep. 11”H grill shelf (10.75”H trim kit sides)	
27” Depth SKU	24” Depth SKU
OGB3640D	OGB3640D-24
OGB3940D	OGB3940D-24
OGB4240D	OGB4240D-24
OGB4540D	OGB4540D-24
OGB4840D	OGB4840D-24

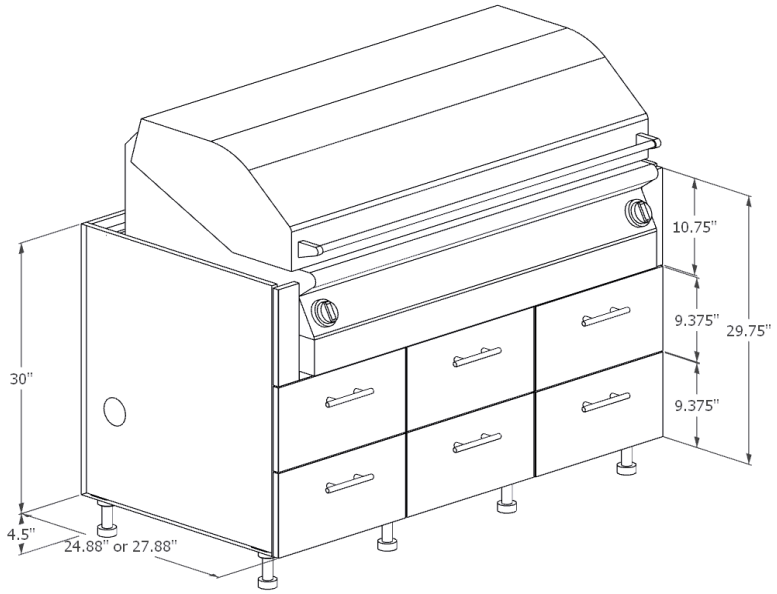

Product Description	
OGBxx60D: Outdoor Grill Base, Deep, 6 Drawers. 11”H grill shelf (10.75”H trim kit sides)	
27” Depth SKU	24” Depth SKU
OGB5460D	OGB5460D-24
OGB5860D	OGB5860D-24
OGB6260D	OGB6260D-24

Grill Cabinets - 11"H Shelf: Drawers/Doors

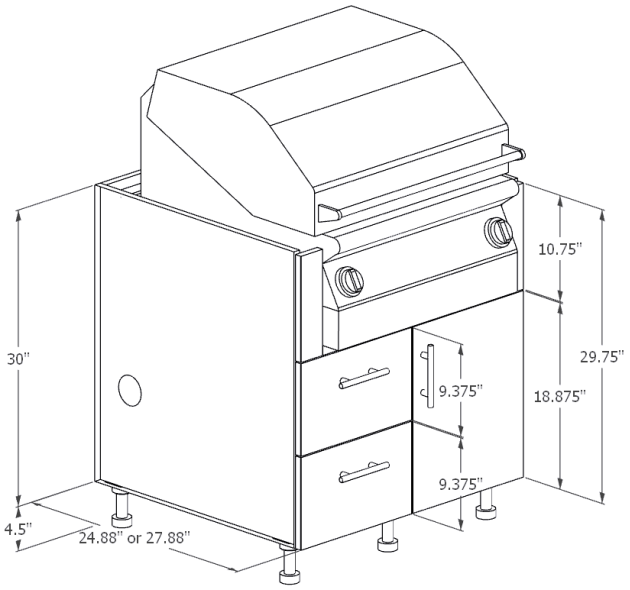

Product Description	
OGBxx21D: Outdoor Grill Base, 2 Drawers, 1 Door, Deep. 11”H grill shelf (10.75”H trim kit sides)	
27” Depth SKU	24” Depth SKU
OGB3021D	OGB3021D-24
OGB3321D	OGB3321D-24
OGB3621D	OGB3621D-24
OGB3921D	OGB3921D-24
OGB4221D	OGB4221D-24
OGB4821D	OGB4821D-24

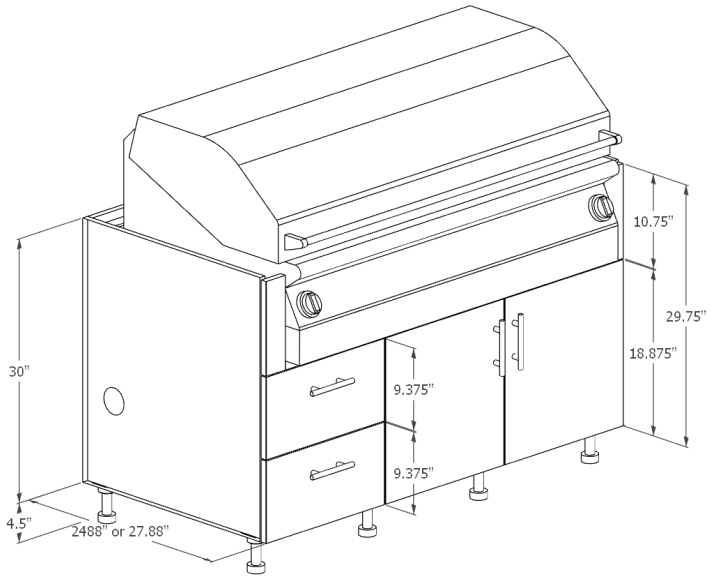

Product Description	
OGBxx22D: Outdoor Grill Base, Deep, 2 Drawers, 2 Doors. 11”H grill shelf (10.75”H trim kit sides)	
27” Depth SKU	24” Depth SKU
OGB5422D	OGB5422D-24
OGB5822D	OGB5822D-24
OGB6222D	OGB6222D-24

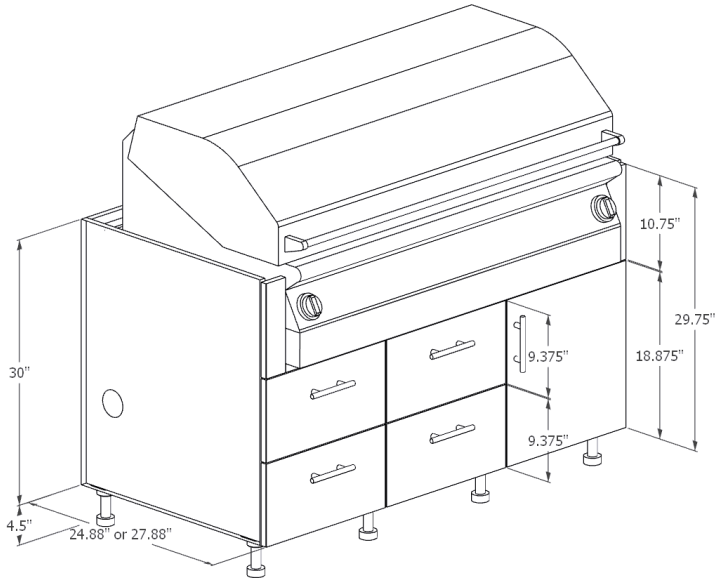

Product Description	
OGBxx41D: Outdoor Grill Base, Deep, 4 Drawers, 1 Door. 11”H grill shelf (10.75”H trim kit sides)	
27” Depth SKU	24” Depth SKU
OGB5441D	OGB5441D-24
OGB5841D	OGB5841D-24
OGB6241D	OGB6241D-24

Grill Cabinets - 11"H Shelf: OGBxx20D, OGBxx30D

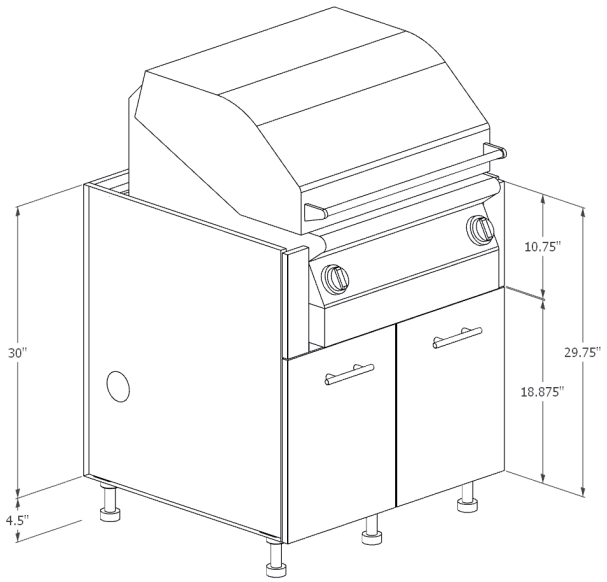

Product Description	
OGBxx20D: Outdoor Grill Base, Deep, 2 Full-Height Drawers. 11”H grill shelf (10.75”H trim kit sides)	
27” Depth SKU	24” Depth SKU
OGB3020D	OGB3020D-24
OGB3320D	OGB3320D-24
OGB3620D	OGB3620D-24
OGB3920D	OGB3920D-24
OGB4220D	OGB4220D-24
OGB4520D	OGB4520D-24
OGB4820D	OGB4820D-24

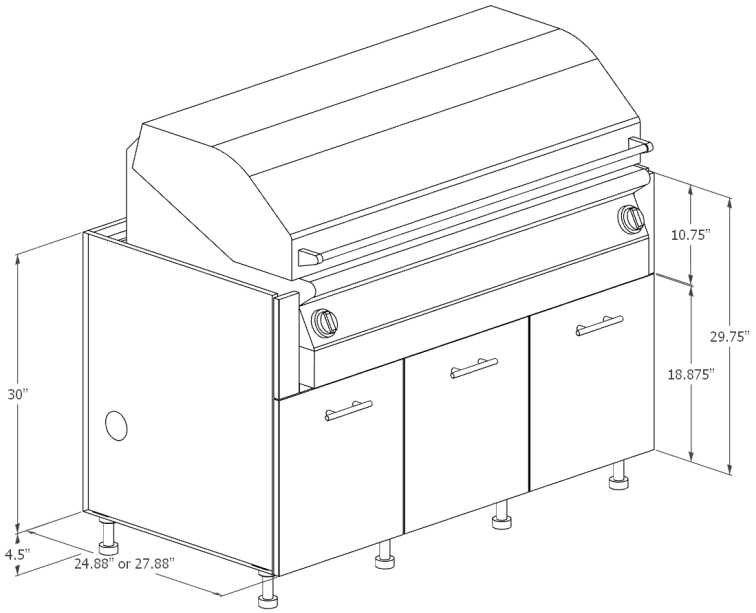

Product Description	
OGBxx30D: Outdoor Grill Base, Deep, 3 Full-Height Drawers. 11”H grill shelf (10.75”H trim kit sides)	
27” Depth SKU	24” Depth SKU
OGB5430D	OGB5430D-24
OGB5830D	OGB5830D-24
OGB6230D	OGB6230D-24

Grill Cabinets - 12.5"H Shelf: OGBxx02W, OGBxx03W

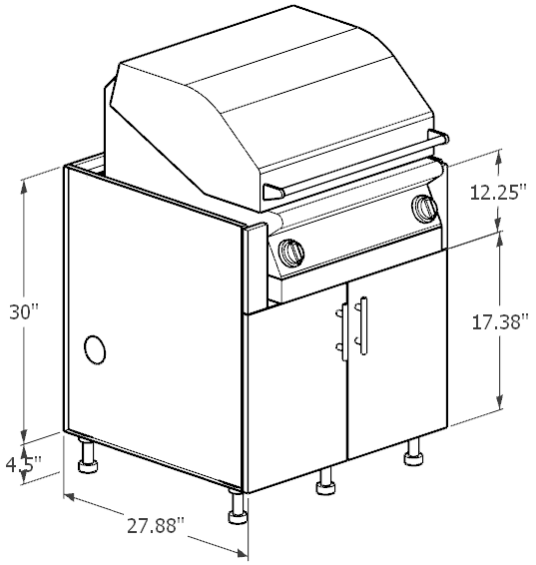

Product Description	
OGBxx02W: Outdoor Grill Base, 2 Doors 12.5”H grill shelf (12.25”H trim kit sides)	
27” Depth SKU	24” Depth SKU
OGB3602W	N/A
OGB3902W	N/A
OGB4202W	N/A
OGB4502W	N/A
OGB4802W	N/A

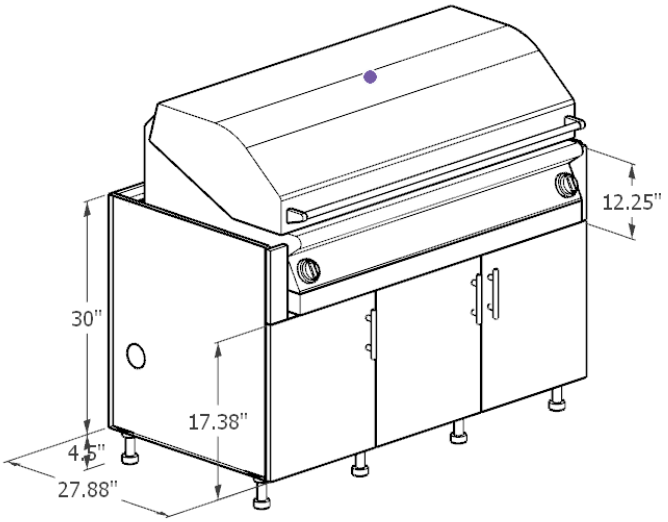

Product Description	
OGBxx03D: Outdoor Grill Base, 3 Doors 12.5”H grill shelf (12.25”H trim kit sides)	
27” Depth SKU	24” Depth SKU
OGB5403W	N/A
OGB5803W	N/A
OGB6203W	N/A

Grill Cabinets - 12.5"H Shelf: OGBxx20W, OGBxx30W

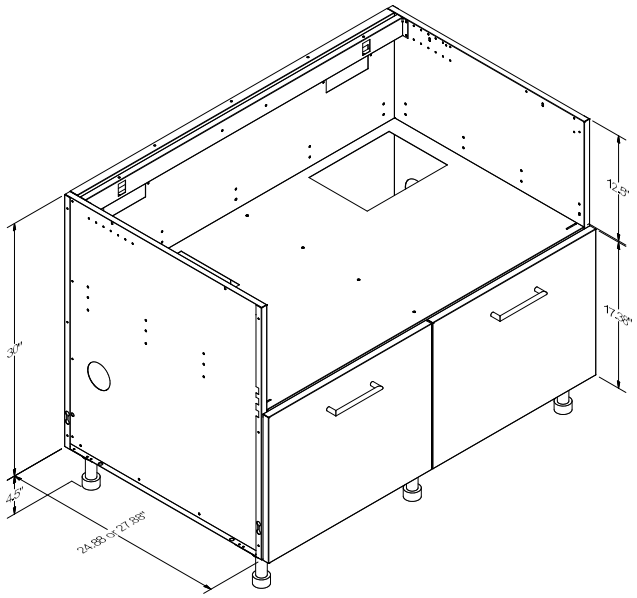

Product Description	
OGBxx20W: Outdoor Grill Base, 2 Drawers 12.5”H grill shelf (12.25”H trim kit sides)	
27” Depth SKU	24” Depth SKU
OGB3020W	N/A
OGB3320W	N/A
OGB3620W	N/A
OGB3920W	N/A
OGB4220W	N/A
OGB4520W	N/A
OGB4820W	N/A

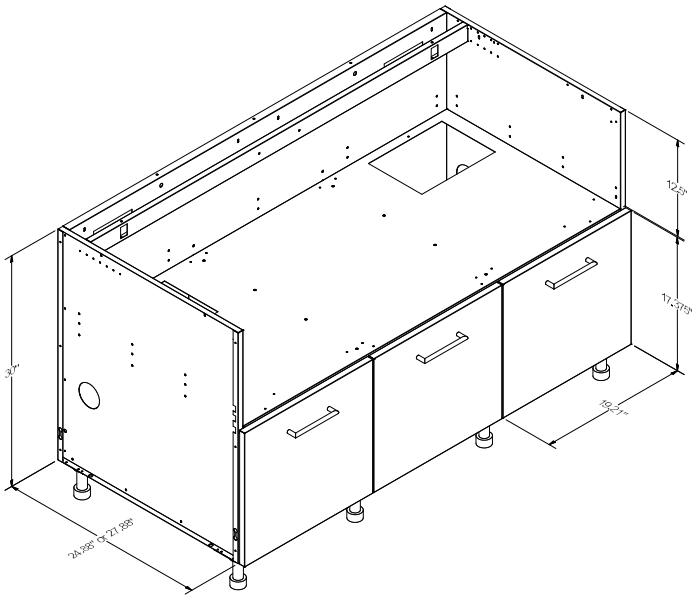

Product Description	
OGBxx30W: Outdoor Grill Base, 3 Drawers. 12.5”H grill shelf (12.25”H trim kit sides)	
27” Depth SKU	24” Depth SKU
OGB5430W	N/A
OGB5830W	N/A
OGB6230W	N/A

Grill Cabinets - 12.5"H Shelf: OGBxx40W, OGBxx60W

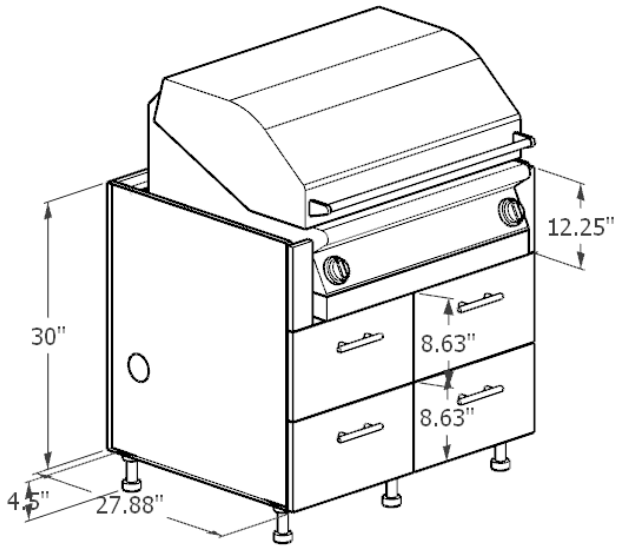

Product Description	
OGBxx40W: Outdoor Grill Base, 4 Drawers 12.5”H grill shelf (12.25”H trim kit sides)	
27” Depth SKU	24” Depth SKU
OGB3640W	N/A
OGB3940W	N/A
OGB4240W	N/A
OGB4540W	N/A
OGB4840W	N/A

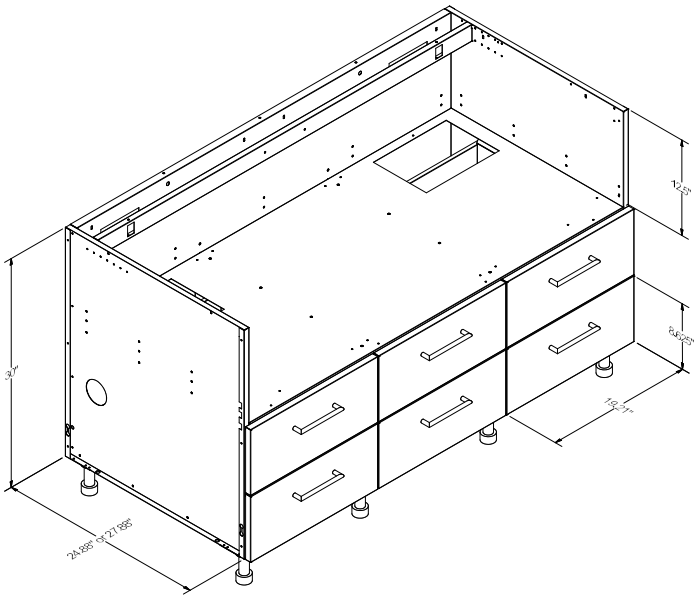

Product Description	
OGBxx60W: Outdoor Grill Base, 6 Drawers 12.5”H grill shelf (12.25”H trim kit sides)	
27” Depth SKU	24” Depth SKU
OGB5460W	N/A
OGB5860W	N/A
OGB6260W	N/A

Grill Cabinets - 12.5"H Shelf: OGBxx21W, xx22W, xx41W

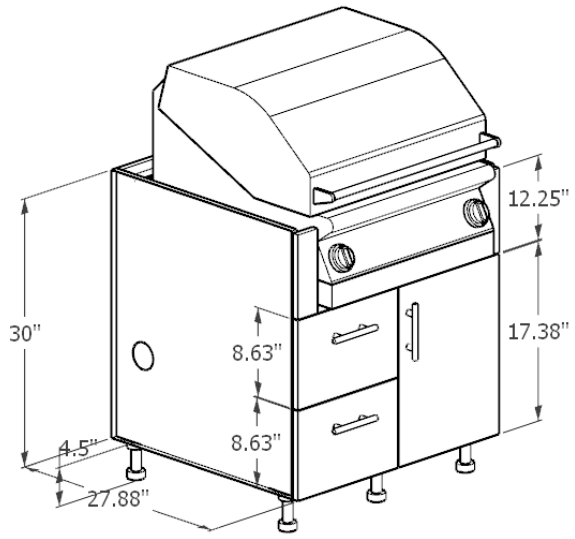

Product Description	
OGBxx21W: Outdoor Grill Base, 2 Drawers, 1 Door 12.5”H grill shelf (12.25”H trim kit sides)	
27” Depth SKU	24” Depth SKU
OGB3621W	N/A
OGB3921W	N/A
OGB4221W	N/A
OGB4521W	N/A
OGB4821W	N/A

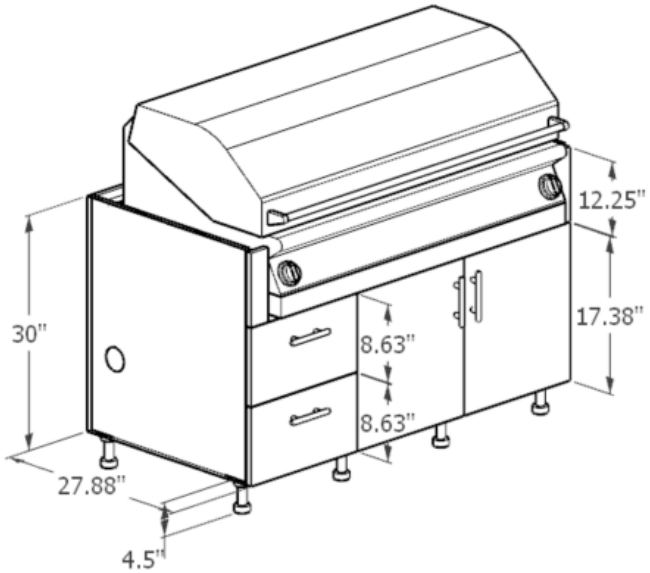

Product Description	
OGBxx22W: Outdoor Grill Base, 2 Drawers, 2 Doors. 12.5”H grill shelf (12.25”H trim kit sides)	
27” Depth SKU	24” Depth SKU
OGB5422W	N/A
OGB5822W	N/A
OGB6222W	N/A

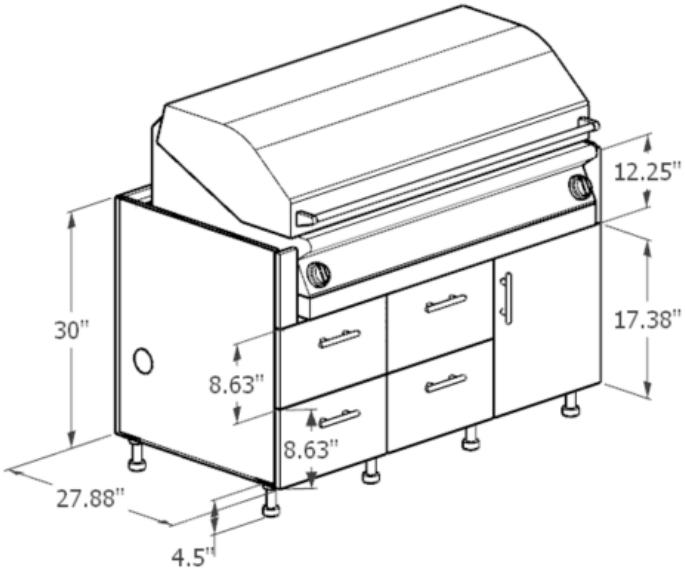

Product Description	
OGBxx41W: Outdoor Grill Base, 4 Drawers, 1 Door. 12.5”H grill shelf (12.25”H trim kit sides)	
27” Depth SKU	24” Depth SKU
OGB5441W	N/A
OGB5841W	N/A
OGB6241W	N/A

Grill Cabinets - 18.5"H Shelf: OGBxx20HB, OGBxx30HB

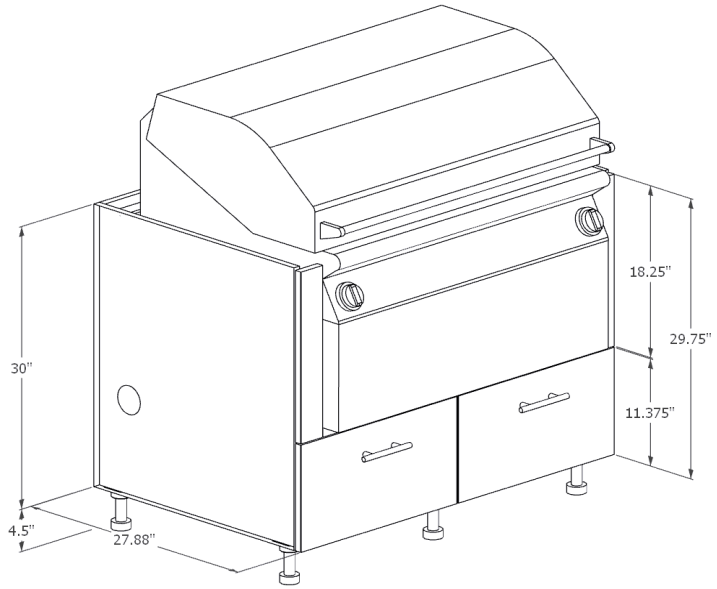

Product Description	
OGBxx20HB: Outdoor Grill Base 2 Drawers, extra deep shelf, for Hasty Bake grills and other extra deep cooking appliances. 18.50”H grill shelf (18.25”H trim kit sides)	
27” Depth SKU	24” Depth SKU
OGB3020HB	N/A
OGB3320HB	N/A
OGB3620HB	N/A
OGB3920HB	N/A
OGB4220HB	N/A
OGB4520HB	N/A
OGB4820HB	N/A

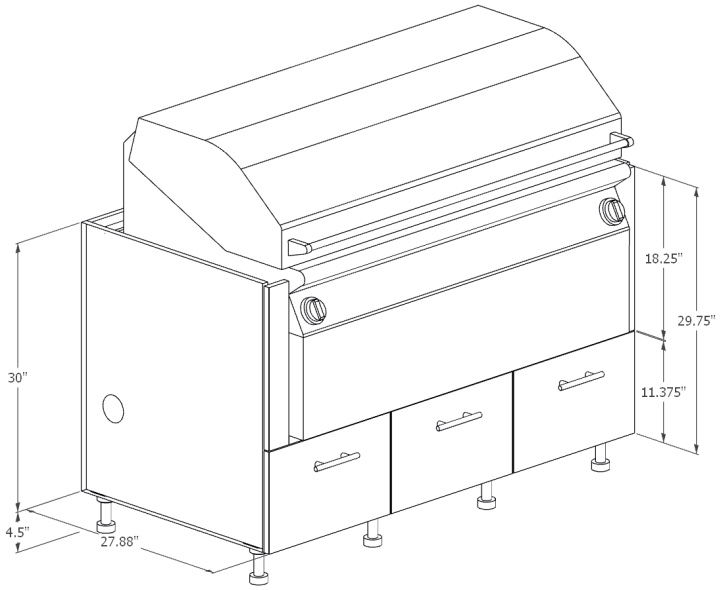

Product Description	
OGBxx30HB: Outdoor Grill Base, 3 Drawers, for Hasty Bake grills and other extra deep cooking appliances. 18.50”H grill shelf (18.25”H trim kit sides)	
27” Depth SKU	24” Depth SKU
OGB5430HB	N/A
OGB5830HB	N/A

Grill Cabinets - OGBxx20-CALIBER ROCKWELL

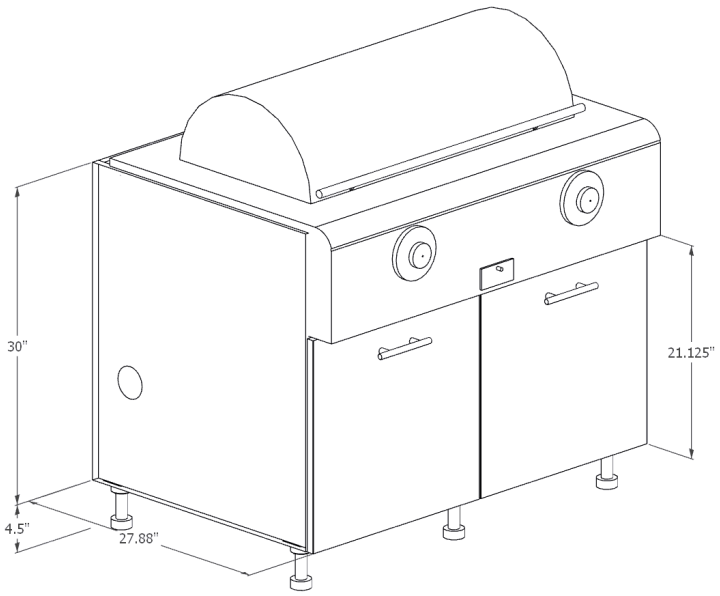

Product Description	
OGBxx20-CALIBER ROCKWELL: Outdoor Grill Base, 2 Drawers, used ONLY for Caliber Rockwell grills of the same size, *NO TRIM KIT NEEDED! *this cabinet cannot be used on the end of a run, please call sales rep to discuss*	
27” Depth SKU	24” Depth SKU
OGB4220-CALIBER ROCKWELL	N/A
OGB4820-CALIBER ROCKWELL	N/A

Grill Cabinets - Gas Stop Timer: OGBxx00 GS, OGBxx00D GS

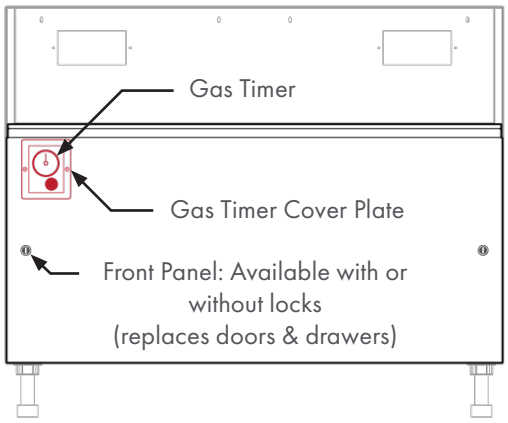

Product Description	
OGBxx00P: Outdoor Grill Base, No Doors/Drawers, Full bottom Tecno-style Panel with 1-hour Gas Shutoff Timer included. 9.75”H grill shelf (9.5”H trim kit sides)	
27” Depth SKU	24” Depth SKU
OGB3600 GS	OGB3600-24 GS
OGB3900 GS	OGB3900-24 GS
OGB4200 GS	OGB4200-24 GS
OGB4500 GS	OGB4500-24 GS
OGB4800 GS	OGB4800-24 GS
OGB5400 GS	OGB5400-24 GS
OGB5800 GS	OGB5800-24 GS

Note: Gas Stop Timer bases 45" or larger come with two identical cover plates split in the middle. The timer will remain on the left side when facing the base from the front.

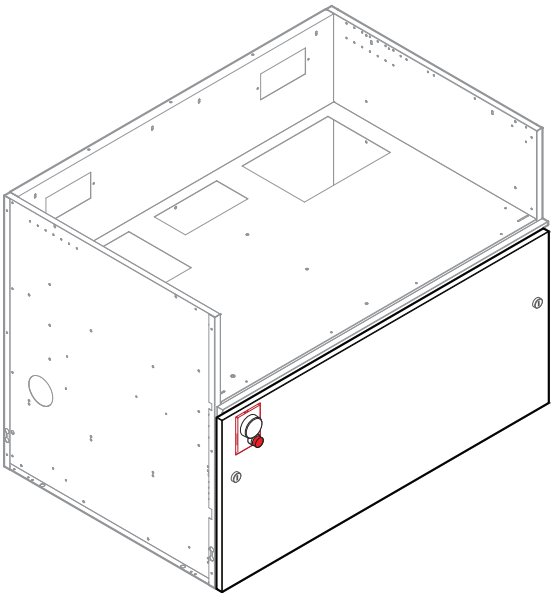

Product Description	
OGBxx00P: Outdoor Grill Base Deep, No Doors/Drawers, Full bottom Tecno-style Panel with 1-hour Gas Shutoff Timer included. 11”H grill shelf (10.75”H trim kit sides)	
27” Depth SKU	24” Depth SKU
OGB3600D GS	OGB3600D-24 GS
OGB3900D GS	OGB3900D-24 GS
OGB4200D GS	OGB4200D-24 GS
OGB4500D GS	OGB4500D-24 GS
OGB4800D GS	OGB4800D-24 GS
OGB5400D GS	OGB5400D-24 GS
OGB5800D GS	OGB5800D-24 GS

Grill Cabinets - Tecno Style: OGBxx00P, OGBxx00DP

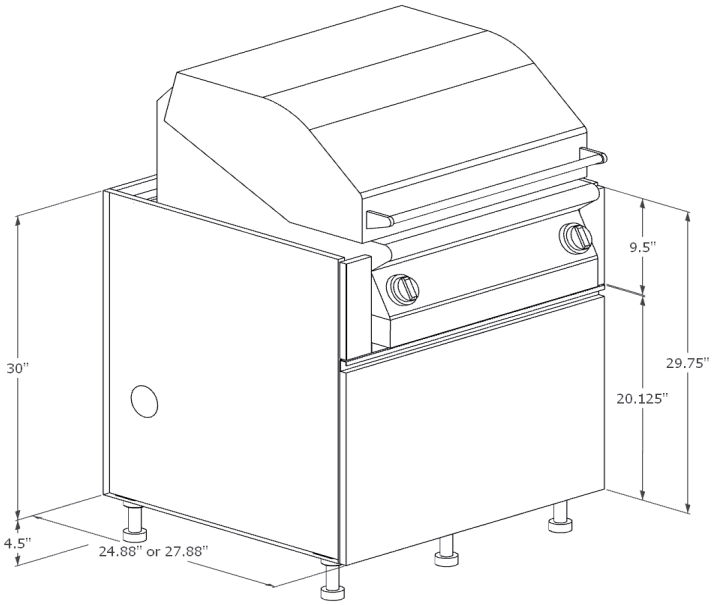

Product Description	
OGBxx00P: Outdoor Grill Base, No Doors/Drawers, Full-Face Tecno-style Panel, installed on magnets with no hinges. 9.75”H grill shelf (9.5”H trim kit sides)	
27” Depth SKU	24” Depth SKU
OGB3000P	OGB3000P-24
OGB3300P	OGB3300P-24
OGB3600P	OGB3600P-24
OGB3900P	OGB3900P-24
OGB4200P	OGB4200P-24
OGB4500P	OGB4500P-24
OGB4800P	OGB4800P-24

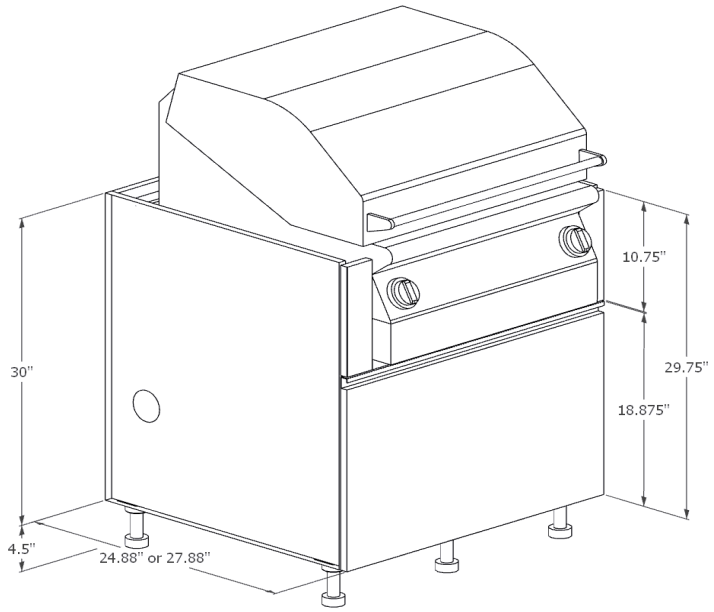

Product Description	
OGBxx00DP: Outdoor Grill Base, Deep, No Doors/Drawers, Full-Face Tecno-style Panel, installed on magnets with no hinges. 11”H grill shelf (10.75”H trim kit sides)	
27” Depth SKU	24” Depth SKU
OGB3000DP	OGB3000DP-24
OGB3300DP	OGB3300DP-24
OGB3600DP	OGB3600DP-24
OGB3900DP	OGB3900DP-24
OGB4200DP	OGB4200DP-24
OGB4500DP	OGB4500DP-24
OGB4800DP	OGB4800DP-24

Grill/Large Insert Cabinets - OGFxx00

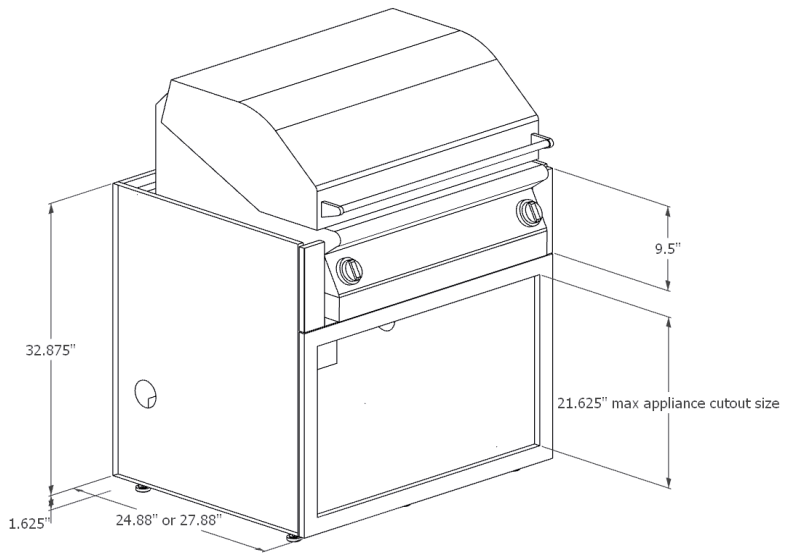

Product Description	
OGFxx00: Outdoor Grill Base for grill and large insert such as refrigerator or dry pantry. 9.75"H grill shelf (9.5"H trim kit sides)	
27" Depth SKU	24" Depth SKU
OGF3600	OGF3600-24
OGF4200	OGF4200-24
OGF4800	OGF4800-24
OGF5400	OGF5400-24
OGF6200	OGF6200-24

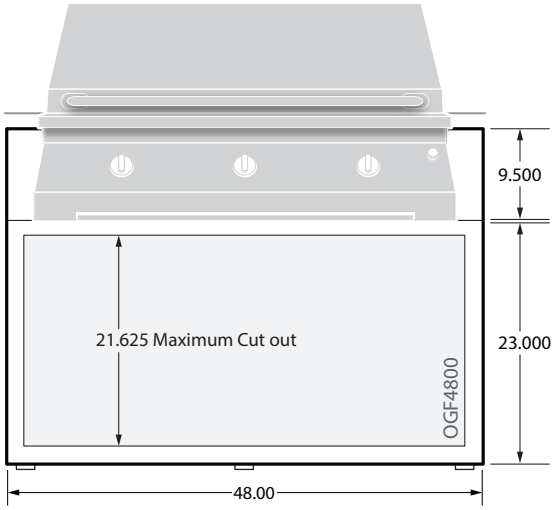

NOTE: OGF bases have a larger cabinet box than standard cabinets.

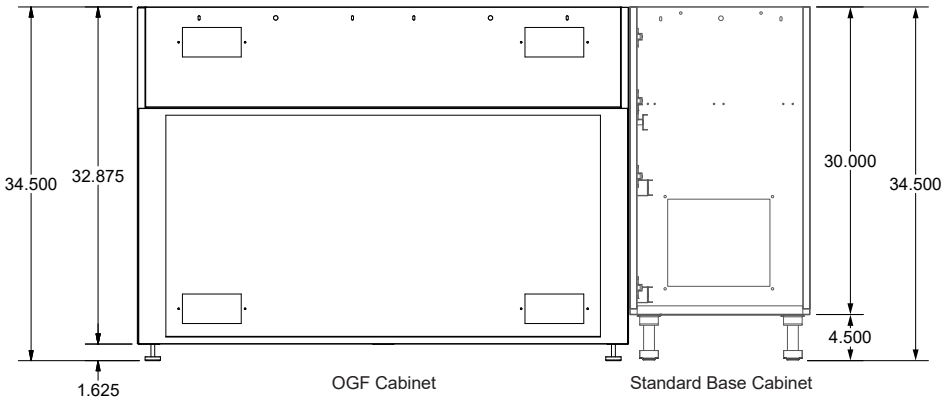

Grill/Warming Drawer Cabinets - OGWxx00, OGWxx10

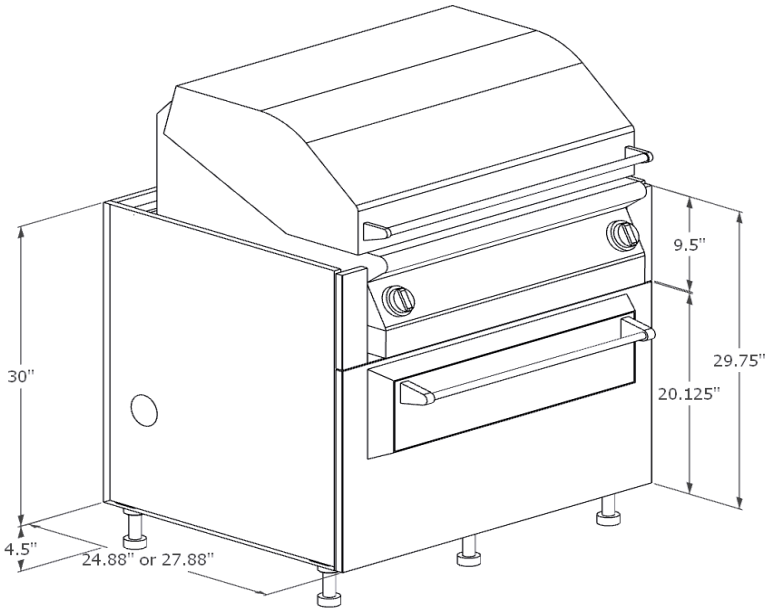

Product Description	
OGWxx00: Outdoor Grill Base for Warming Drawer Insert, No Doors or Drawers. 9.75”H grill shelf (9.5”H trim kit sides)	
27” Depth SKU	24” Depth SKU
OGW3600	N/A
OGW4200	N/A
OGW4800	N/A

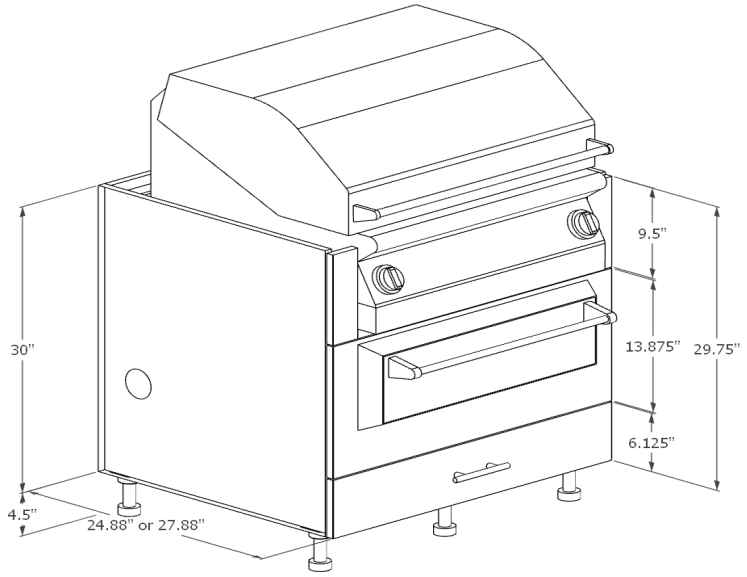

Product Description	
OGWxx10: Outdoor Grill Base for Warming Drawer Insert, 1 Drawer. 9.75”H grill shelf (9.5”H trim kit sides)	
27” Depth SKU	24” Depth SKU
OGW3310	N/A
OGW3610	N/A

Grill/Warming Drawer Cabinets - OGWxx20, OGWxx30

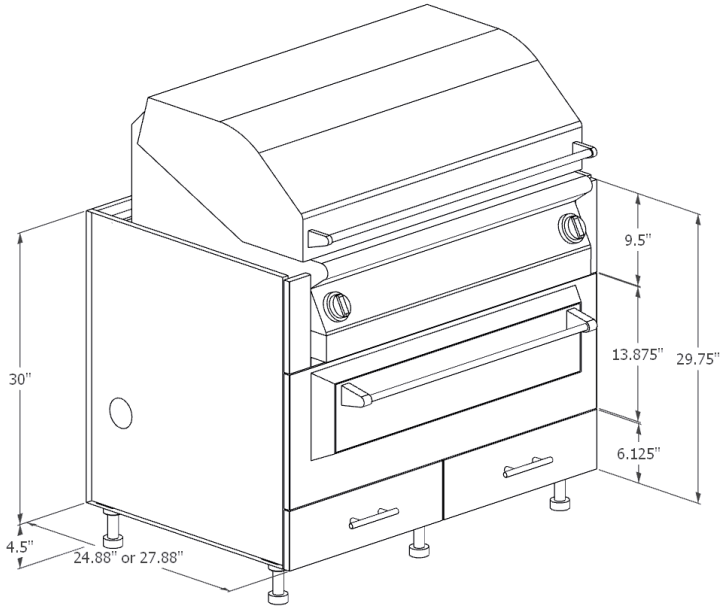

Product Description	
OGWxx20: Outdoor Grill Base for Warming Drawer Insert, 2 Drawers. 9.75”H grill shelf (9.5”H trim kit sides)	
27” Depth SKU	24” Depth SKU
OGW4220	OGW4220-24
OGW4520	OGW4520-24
OGW4820	OGW4820-24
OGW5420	OGW5420-24

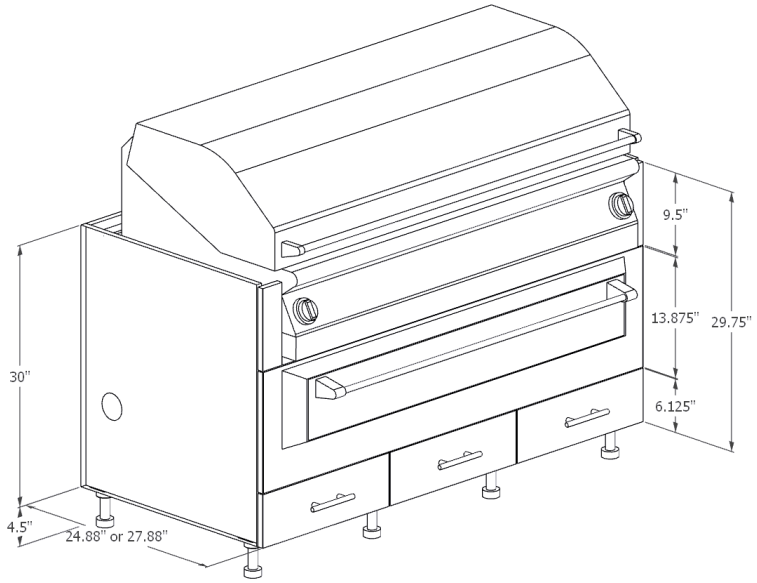

Product Description	
OGWxx30: Outdoor Grill Base for Warming Drawer Insert, 3 Drawers. 9.75”H grill shelf (9.5”H trim kit sides)	
27” Depth SKU	24” Depth SKU
OGW5430	N/A
OGW5830	N/A
OGW6230	N/A

Grill/Warming Drawer Cabinets - OGWxx01, xx11, xx21

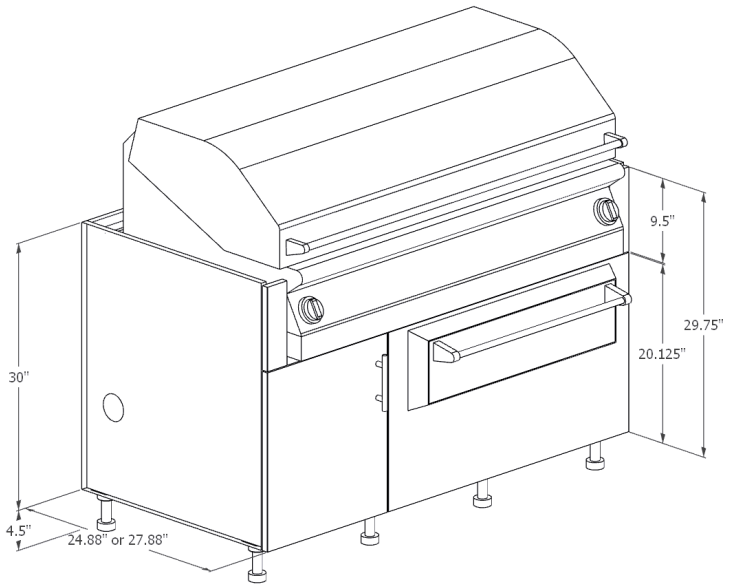

Product Description	
OGWxx01: Outdoor Grill Base for Warming Drawer Insert, 1 Door.. 9.75”H grill shelf (9.5”H trim kit sides)	
27” Depth SKU	24” Depth SKU
OGW5401	N/A
OGW5801	N/A
OGW6201	N/A

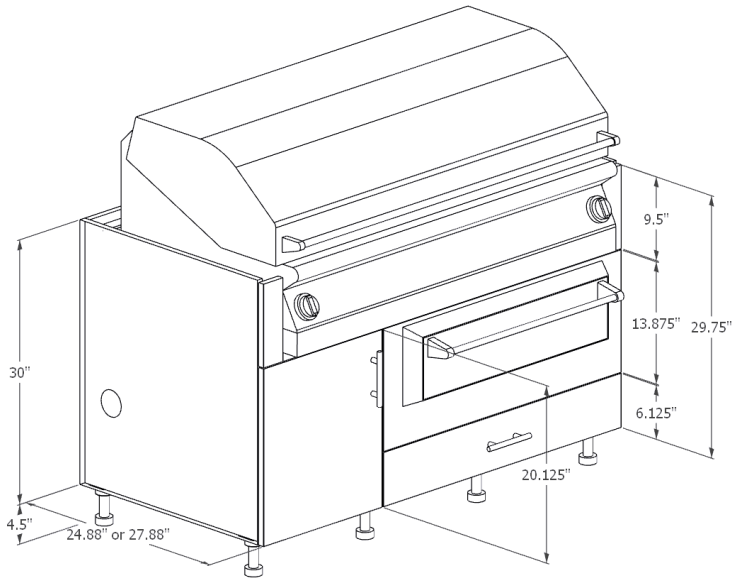

Product Description	
OGWxx11: Outdoor Grill Base for Warming Drawer Insert, 1 Door, 1 Drawer. 9.75”H grill shelf (9.5”H trim kit sides)	
27” Depth SKU	24” Depth SKU
OGW5411	N/A
OGW5811	N/A
OGW6211	N/A

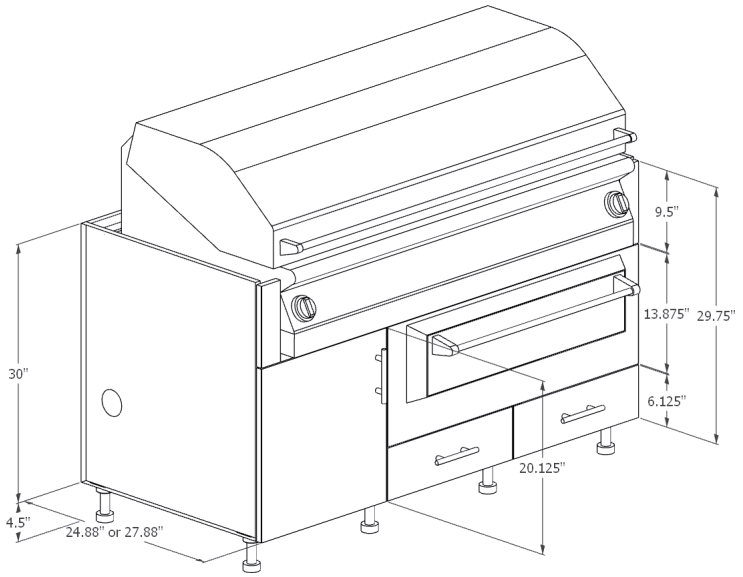

Product Description	
OGWxx21: Outdoor Grill Base, for Warming Drawer Insert, 1 Door, 2 Dawers. 9.75”H grill shelf (9.5”H trim kit sides)	
27” Depth SKU	24” Depth SKU
OGW5421	N/A
OGW5821	N/A
OGW6221	N/A

Grill/Warming Drawer Cabinets - 11”H Shelf: OGWxxxxD

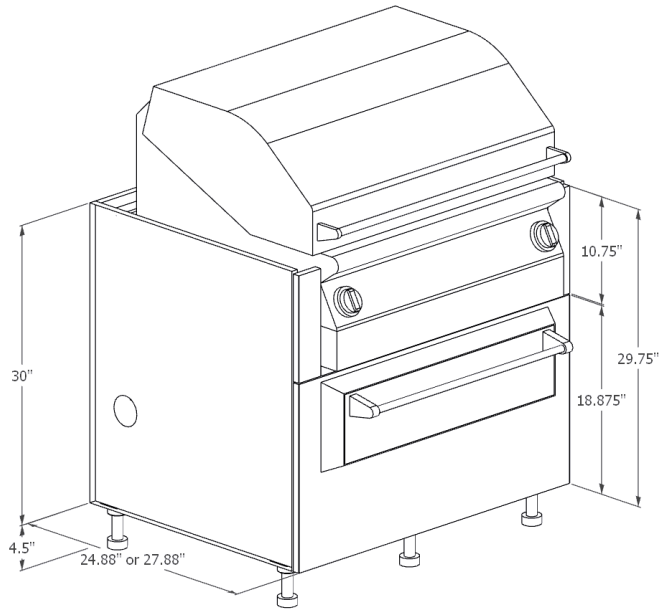

Product Description	
OGWxx00D: Outdoor Grill Base, Deep, for Warming Drawer Insert, No Doors or Drawers. 11”H grill shelf (10.75”H trim kit sides)	
27” Depth SKU	24” Depth SKU
OGW3600D	N/A
OGW4200D	N/A
OGW4800D	N/A

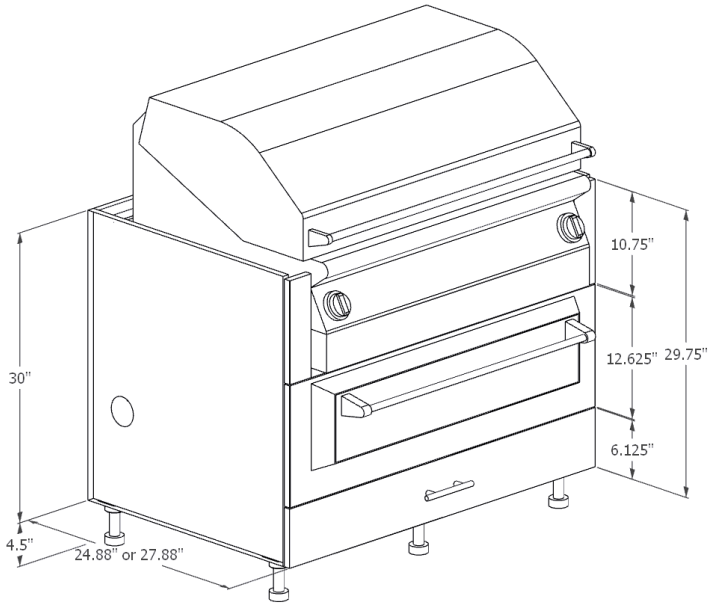

Product Description	
OGWxx10D: Outdoor Grill Base, Deep, for Warming Drawer Insert, 1 Drawer. 11”H grill shelf (10.75”H trim kit sides)	
27” Depth SKU	24” Depth SKU
OGW3310D	N/A
OGW3610D	N/A

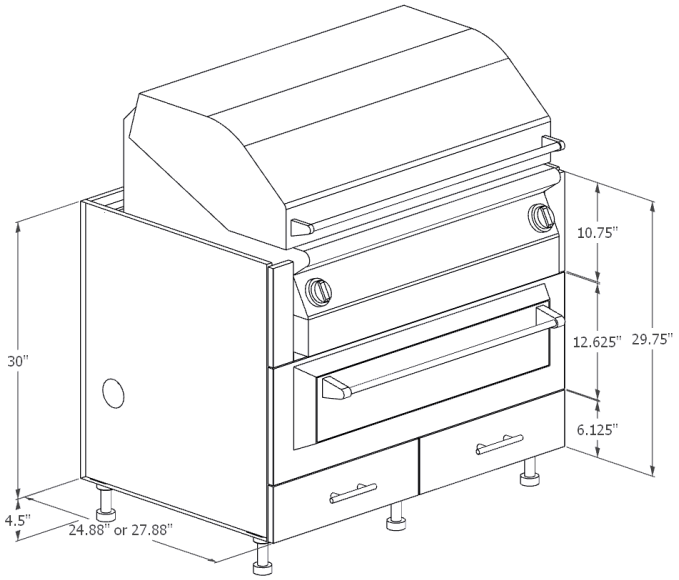

Product Description	
OGWxx20D: Outdoor Grill Base, Deep, for Warming Drawer Insert, 2 Drawers. 11”H grill shelf (10.75”H trim kit sides)	
27” Depth SKU	24” Depth SKU
OGW4220D	N/A
OGW4820D	N/A
OGW5420D	N/A

Grill/Warming Drawer Cabinets - 11”H Shelf: Door, Drawers/Door

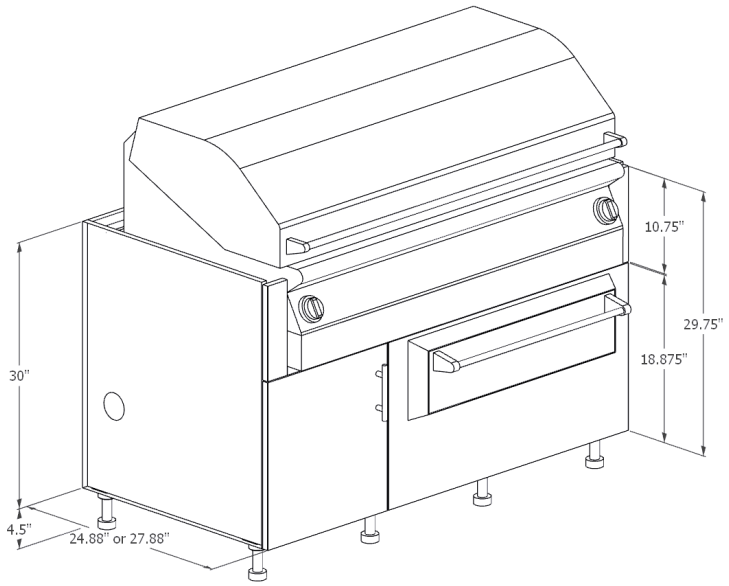

Product Description	
OGWxx01D: Outdoor Grill Base, Deep, for Warming Drawer Insert, 1 Door. 11”H grill shelf (10.75”H trim kit sides)	
27” Depth SKU	24” Depth SKU
OGW5401D	N/A
OGW5801D	N/A
OGW6201D	N/A

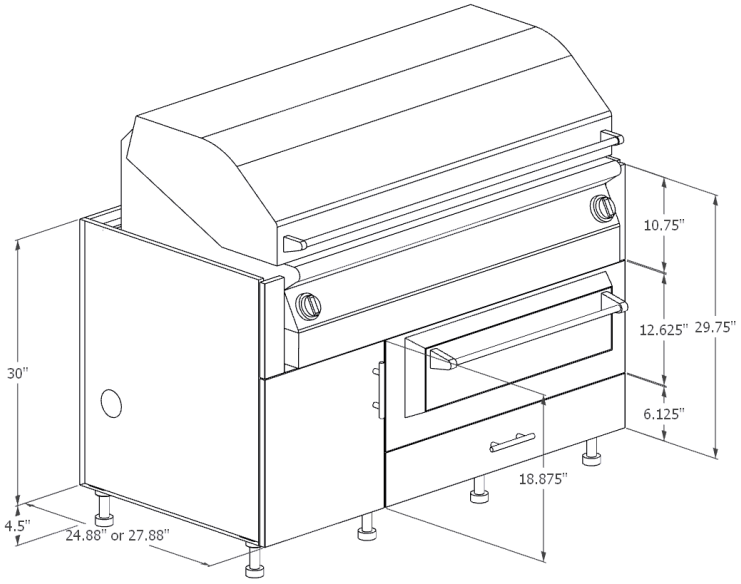

Product Description	
OGWxx11D: Outdoor Grill Base, Deep, for Warming Drawer Insert, 1 Door, 1 Drawer. 11”H grill shelf (10.75”H trim kit sides)	
27” Depth SKU	24” Depth SKU
OGW5411D	N/A
OGW5811D	N/A
OGW6211D	N/A

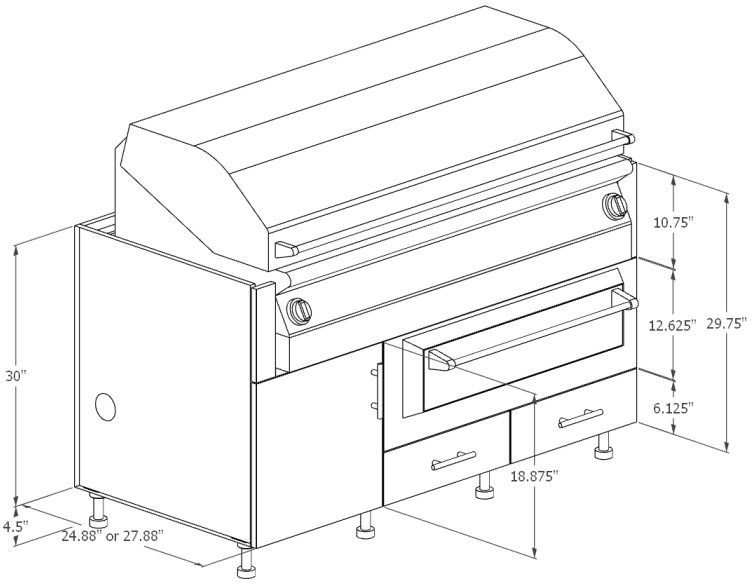

Product Description	
OGWxx21D: Outdoor Grill Base, Deep, for Warming Drawer Insert, 1 Door, 2 Dawers. 11”H grill shelf (10.75”H trim kit sides)	
27” Depth SKU	24” Depth SKU
OGW5421D	N/A
OGW5821D	N/A
OGW6221D	N/A

Grill/Warming Drawer Cabinets - 11”H Shelf: 3 Drawers

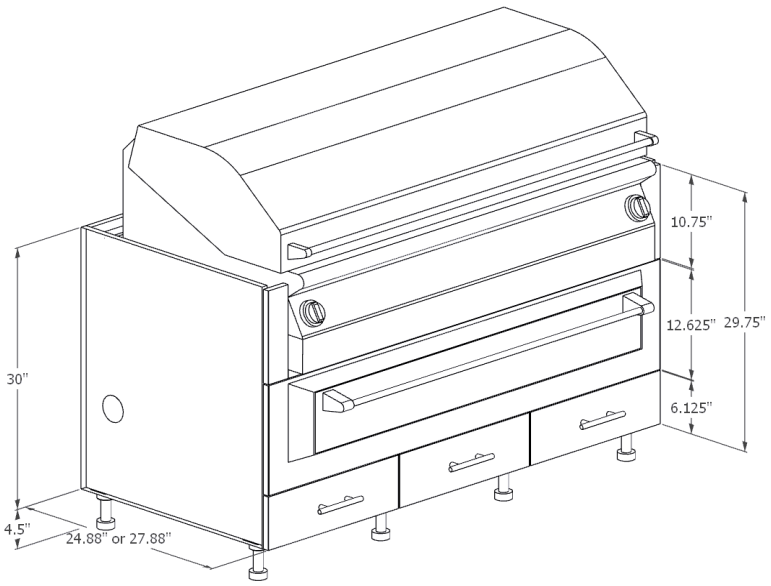

Product Description	
OGWxx30D: Outdoor Grill Base, Deep, for Warming Drawer Insert, 3 Drawers. 11”H grill shelf (10.75”H trim kit sides)	
27” Depth SKU	24” Depth SKU
OGW5830D	N/A
OGW6230D	N/A

Oven Base Cabinets - OOCxx00

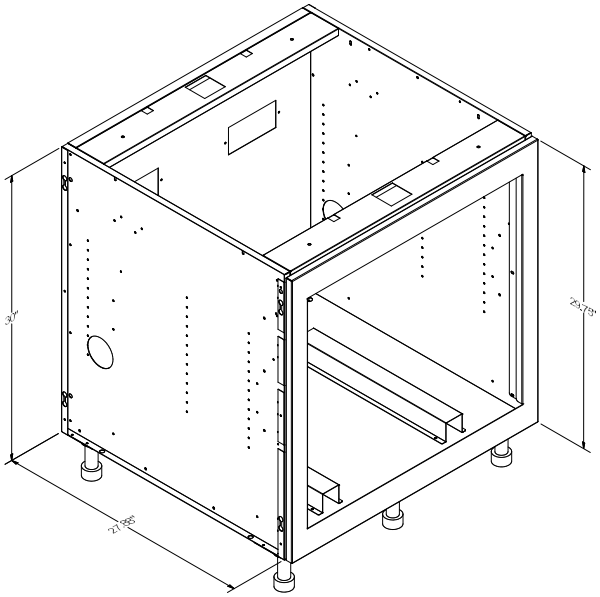

Product Description	
OOCxx00: 30"W x 27"D Base Oven Cabinet, full height oven front. Must specify built-in oven.	
27” Depth SKU	24” Depth SKU
OOC3000	OOC3000-24
OOC3600	OOC3600-24

Viking Grill Cabinets - VGBxxxx

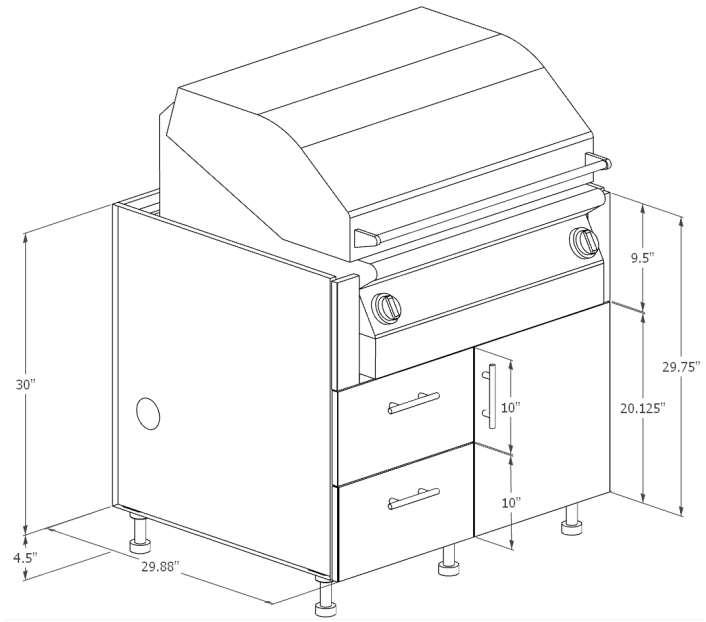

Note: Viking Appliance Bases are for old, pre-existing Viking grills and side burners. New models are able to fit in standard 27.88"D appliance cabinets. Please verify the model year and cutout dimensions of any Viking appliance used to choose the correct base.

Product Description
VGBxx21: Outdoor Viking Grill base, 29" cabinet depth, 2 Drawers, 1 Door. 9.75"H appliance shelf (9.5"H trim kit sides)
29.88" Depth SKU
VGB3321
VGB3621
VGB4821

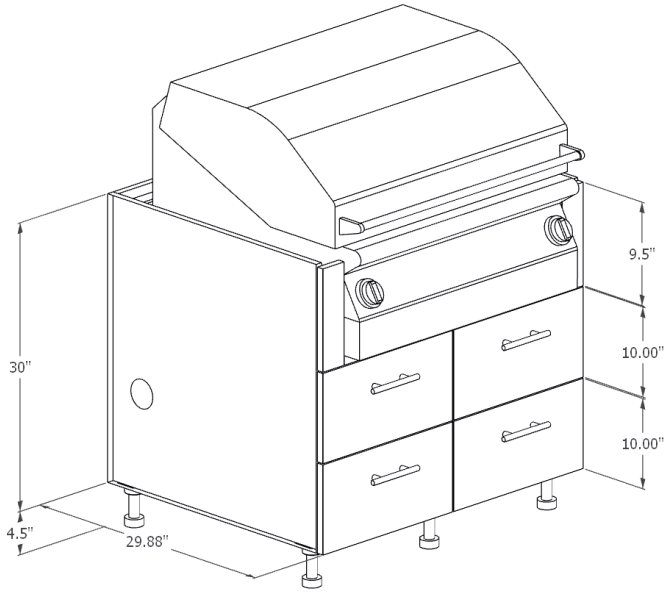

Product Description
VGBxx40: Outdoor Viking Grill base, 29" cabinet depth, 4 Drawers. 9.75"H appliance shelf (9.5"H trim kit sides)
29.88" Depth SKU
VGB3640
VGB4840

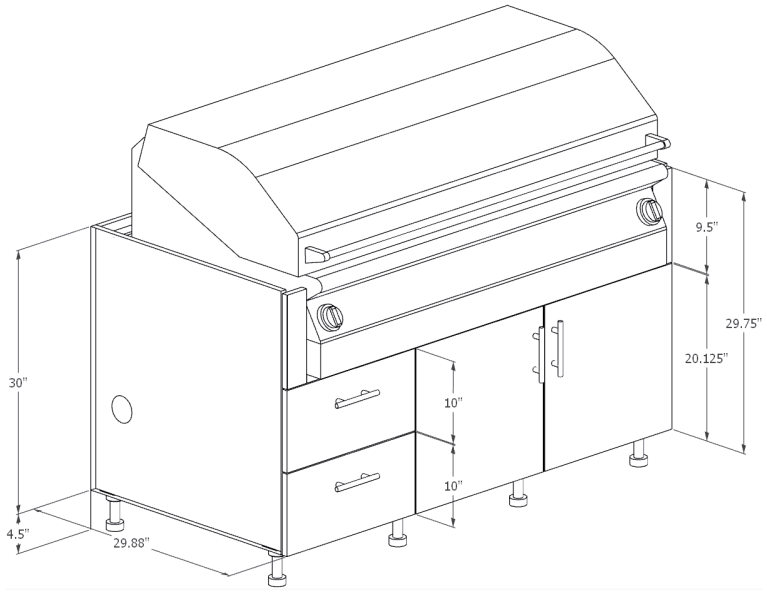

Product Description
VGB5822: Outdoor Viking Grill base, 29" cabinet depth, 2 Doors, 2 drawers. 9.75"H appliance shelf (9.5"H trim kit sides)
29.88" Depth SKU
VGB5822

Viking Grill Cabinets - VGBxx02, VGBxx03

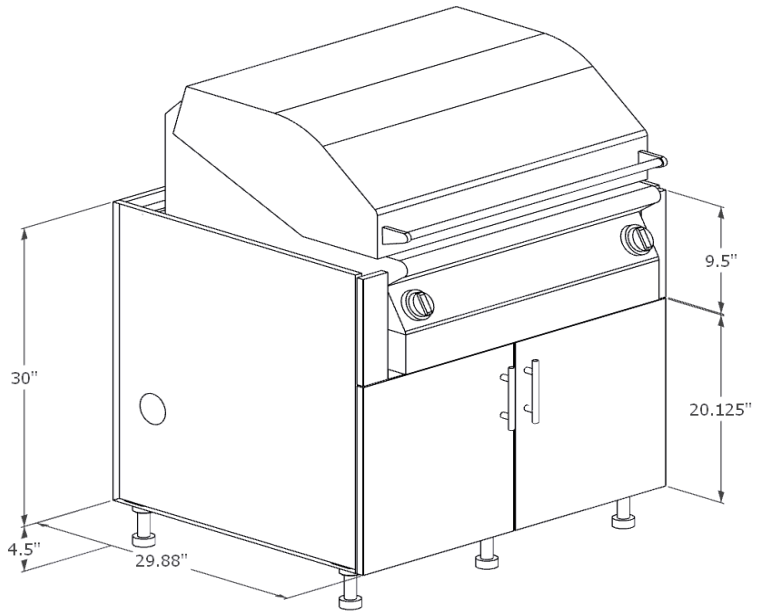

Product Description
VGBxx02: Outdoor Viking Grill base, 29" cabinet depth, 2 Doors. 9.75”H appliance shelf (9.5”H trim kit sides).
29.88” Depth SKU
VGB3602
VGB4802

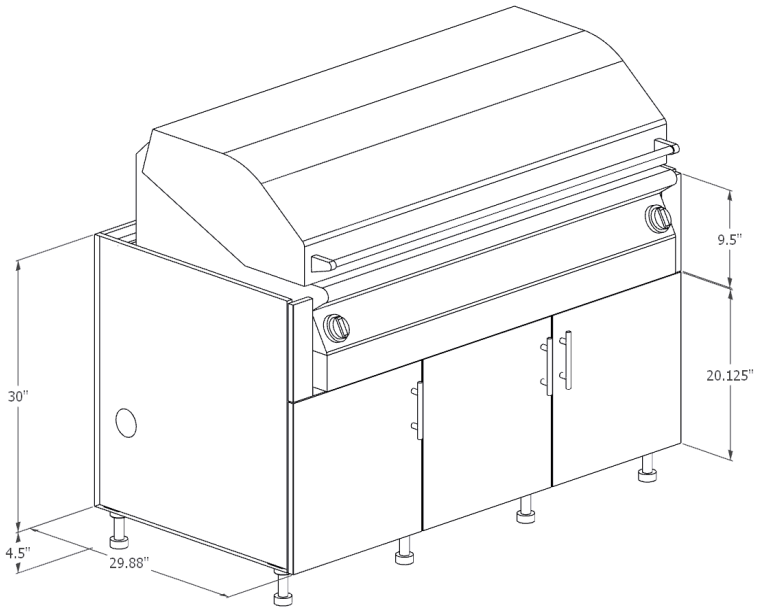

Product Description
VGB5803: Outdoor Viking Grill base, 29" cabinet depth, 3 Doors. 9.75”H appliance shelf (9.5”H trim kit sides)
29.88” Depth SKU
VGB5803

Viking Side Burner Bases - VBBxx01, VBBxx02

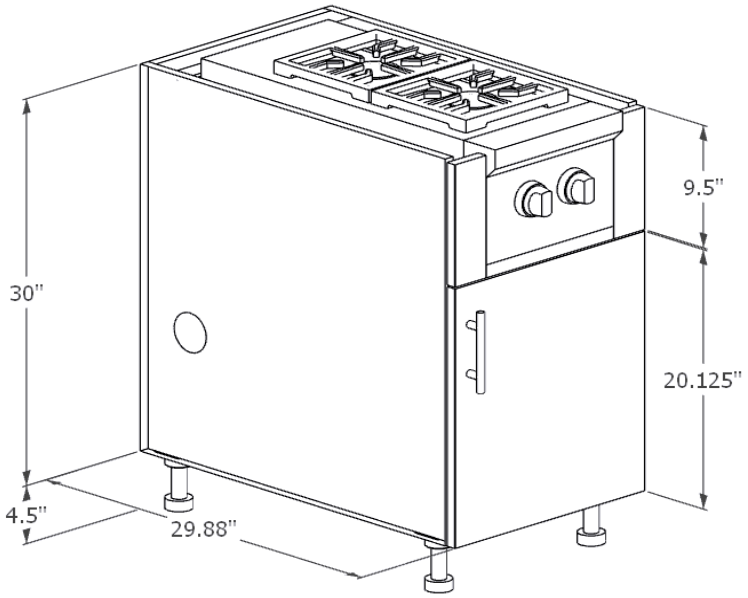

Product Description
VBBxx01: Outdoor Viking Grill base, 29" cabinet depth, 1 Door. 9.75”H appliance shelf (9.5”H trim kit sides)
29.88” Depth SKU
VBB1801-LH
VBB1801-RH
VBB2101-LH
VBB2101-RH

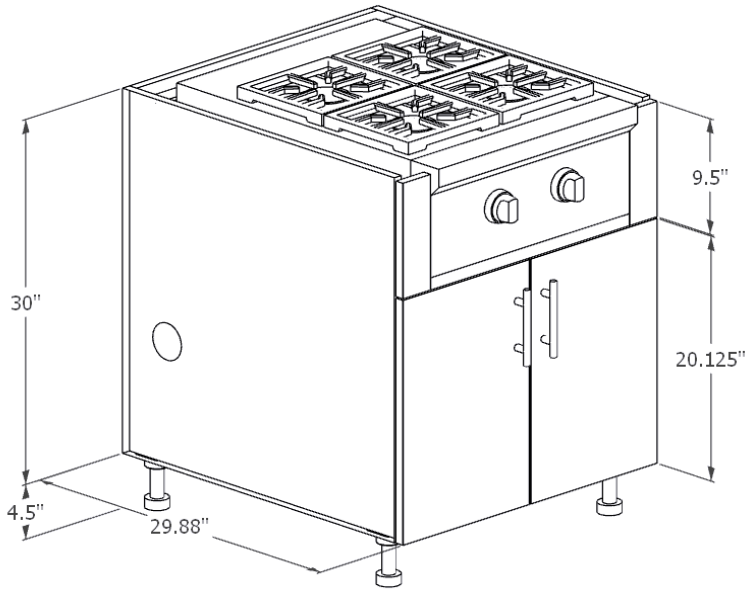

Product Description
VBBxx02: Outdoor Viking Grill base, 29" cabinet depth, 2 Doors. 9.75”H appliance shelf (9.5”H trim kit sides)
29.88” Depth SKU
VBB2702
VBB3002

Tall Storage Cabinets - TBxxxx

- Available in heights of 84”, 90”, and 96”. The height includes the cabinet box and 4.5”H adjustable leg.
- 24”D and 27"D cabinet boxes only, 24.88”D and 27.88" with fronts
- 84”H tall bases 18” or 21”W are available with a single Full-Height Door. 84”H tall bases 24”W and wider are available with 2 Full-Height Doors.
- 18”W and 21”W tall bases have 2 Doors (1 upper and 1 lower) at 90”H and 96”H, and there is an option for 2 doors at 84”H as well. 24”W and wider have 4 doors.
- Oven cabinets (TT) start at 27” in width.
- Cabinets come standard with 4.50” adjustable legs.
- A square-tapered stainless steel leg with adjustable foot is also available for an open contemporary look.
- Black anodized toe kick may be ordered and cut on-site.
- Available with optional pull-out and stationary shelves.
- Flush and 3/4”thick finished side panels available.

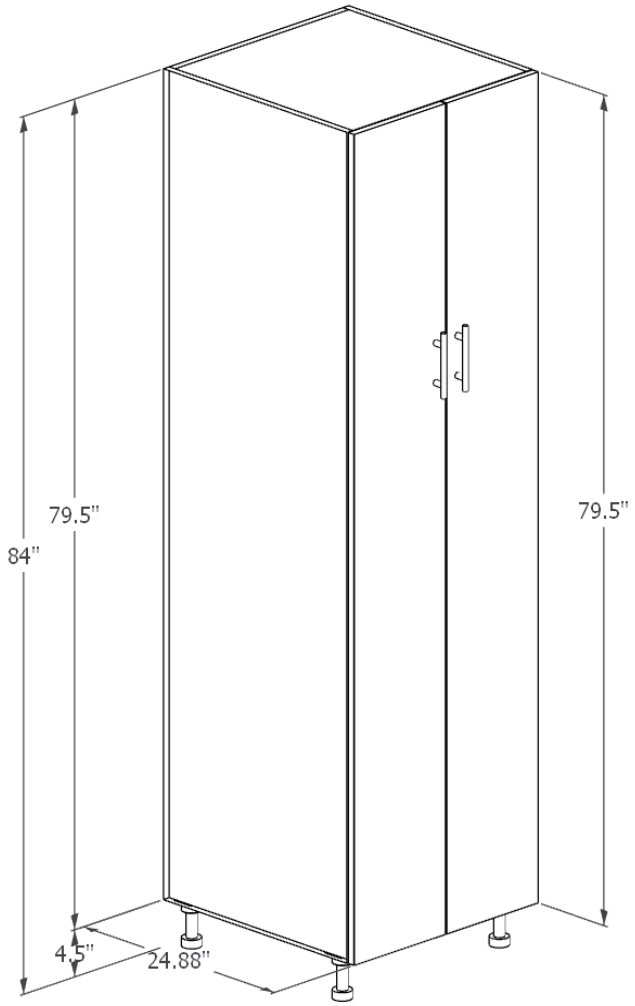

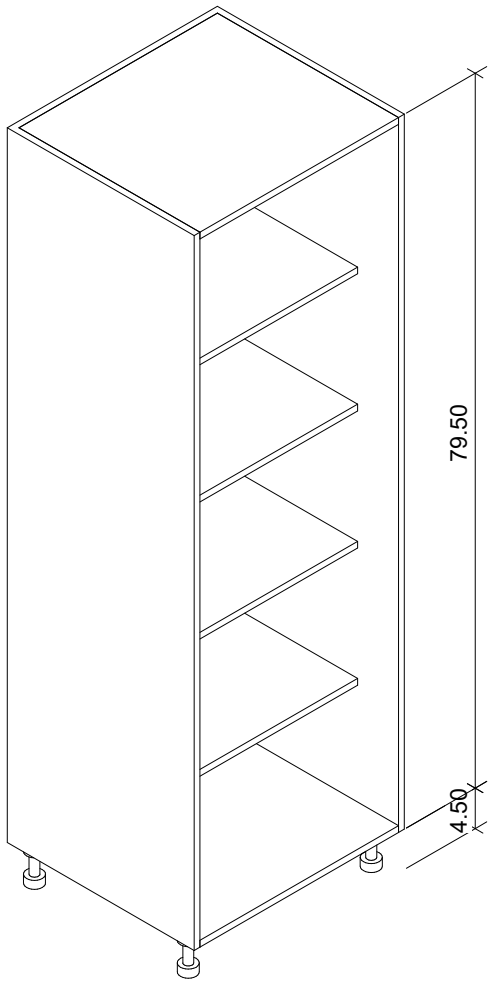

Door removed to show shelving

Tall Storage Cabinets - Full-Height Doors: TBxx84-24-FHD

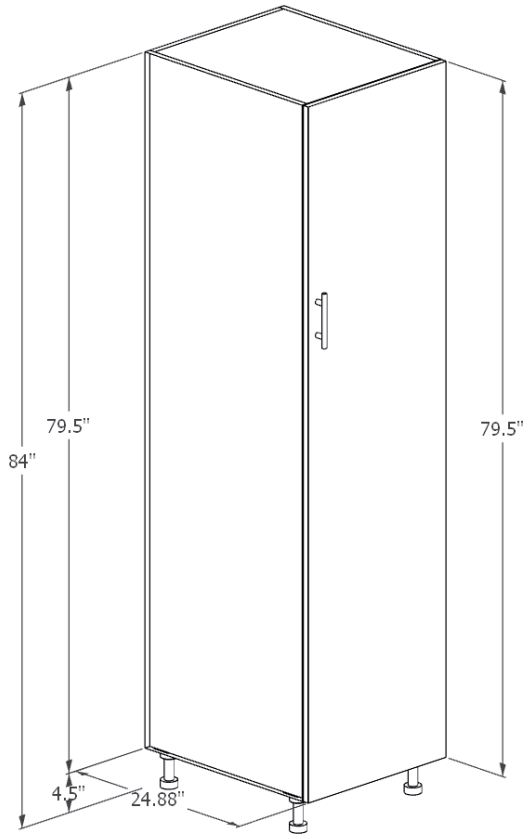

Product Description	
TBxx84-FHD: Tall base, 24" depth, 1 Full-Height Door.	
24” Depth SKU	
TB1884-24-FHD-LH	TB1884-24-FHD-RH
TB2184-24-FHD-LH	TB2184-24-FHD-RH

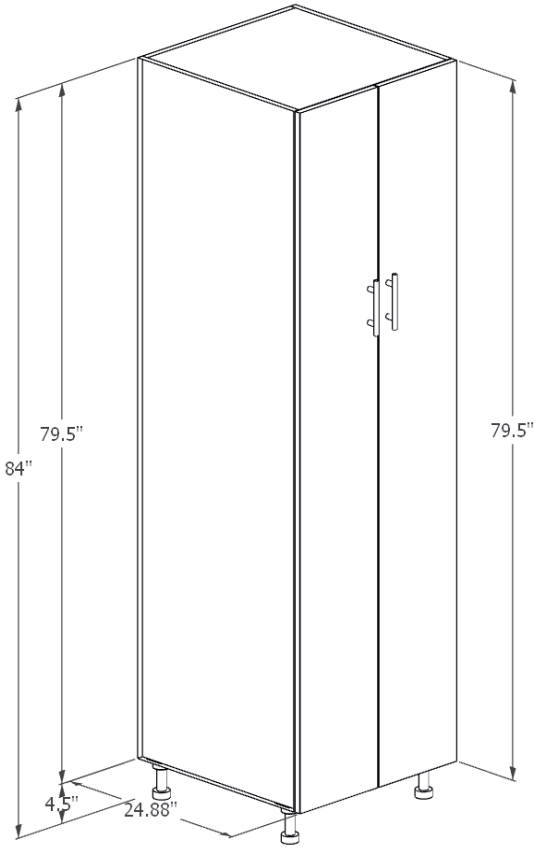

Product Description
TBxx84-FHD: Tall base, 24" depth, 2 Full-Height Doors.
24” Depth SKU
TB2484-24-FHD
TB2784-24-FHD
TB3084-24-FHD
TB3384-24-FHD
TB3684-24-FHD

Tall Storage Cabinets - TBxxxx-24: 2 doors

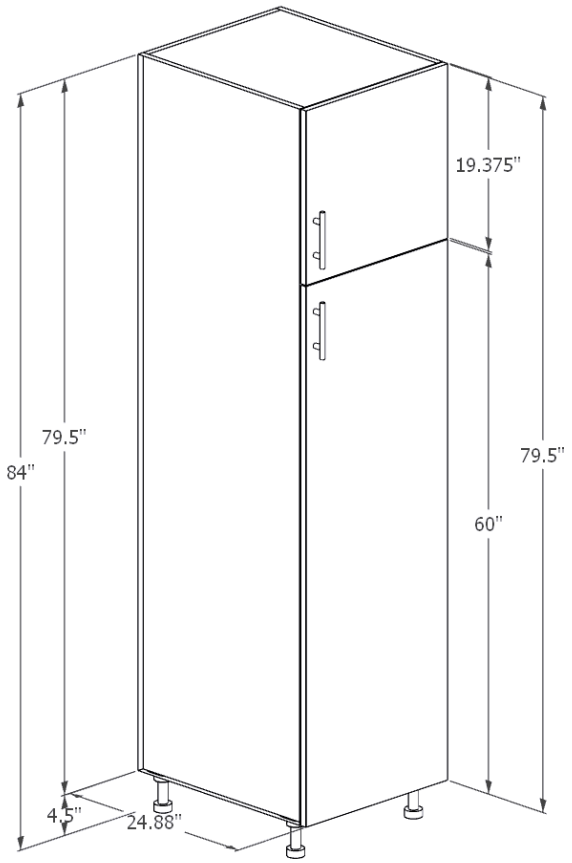

Product Description	
TB18xx, TB21xx: Tall base, 24" depth, 2 Doors, 1 Upper Door, 1 Lower Door.	
24” Depth SKU	
TB1884-24-LH	TB1884-24-RH
TB1890-24-LH	TB1890-24-RH
TB1896-24-LH	TB1896-24-RH
TB2184-24-LH	TB2184-24-RH
TB2190-24-LH	TB2190-24-RH
TB2196-24-LH	TB2196-24-RH

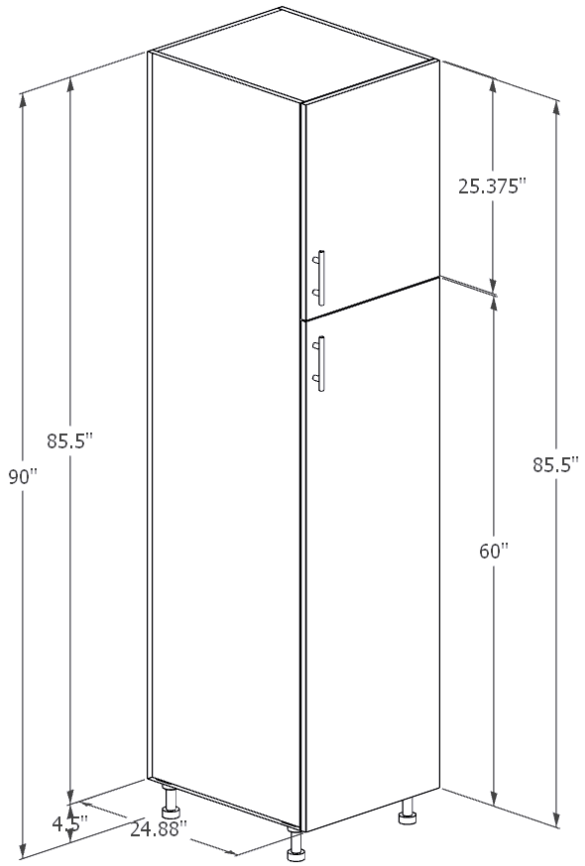

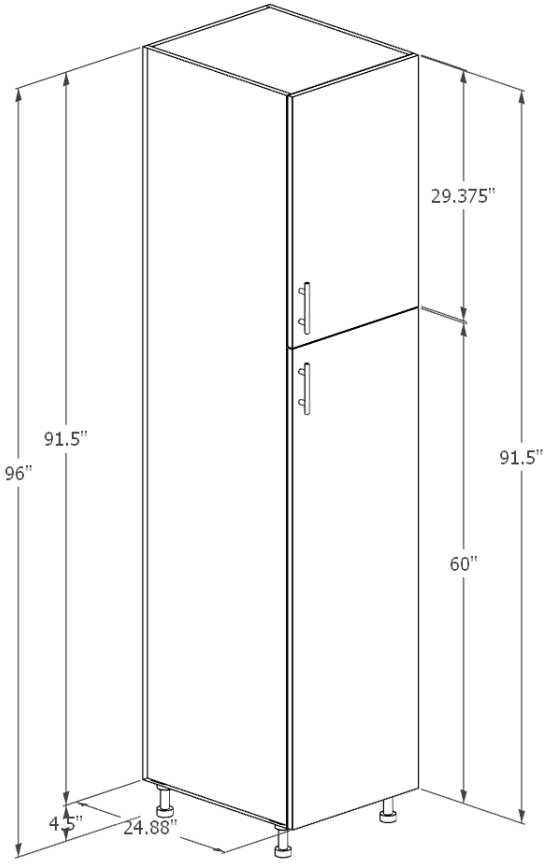

Tall Storage Cabinets - TBxxxx-24: 4 doors

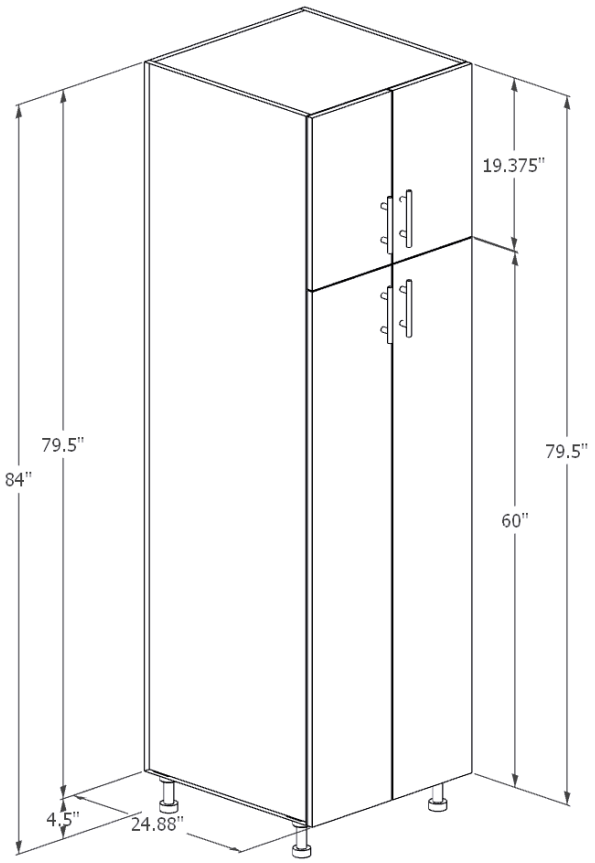

Product Description		
TBxxyy: Tall base, 24" depth, 4 Doors, 2 Upper Doors, 2 Lower Doors.		
84" Tall	90" Tall	96" Tall
TB2484-24	TB2490-24	TB2496-24
TB2784-24	TB2790-24	TB2796-24
TB3084-24	TB3090-24	TB3096-24
TB3384-24	TB3390-24	TB3396-24
TB3684-24	TB3690-24	TB3696-24

Product Description		
TBxxyy: Tall base, 27" depth, 4 Doors, 2 Upper Doors, 2 Lower Doors.		
84" Tall	90" Tall	96" Tall
TB2484	TB2490	TB2496
TB2784	TB2790	TB2796
TB3084	TB3090	TB3096
TB3384	TB3390	TB3396
TB3684	TB3690	TB3696

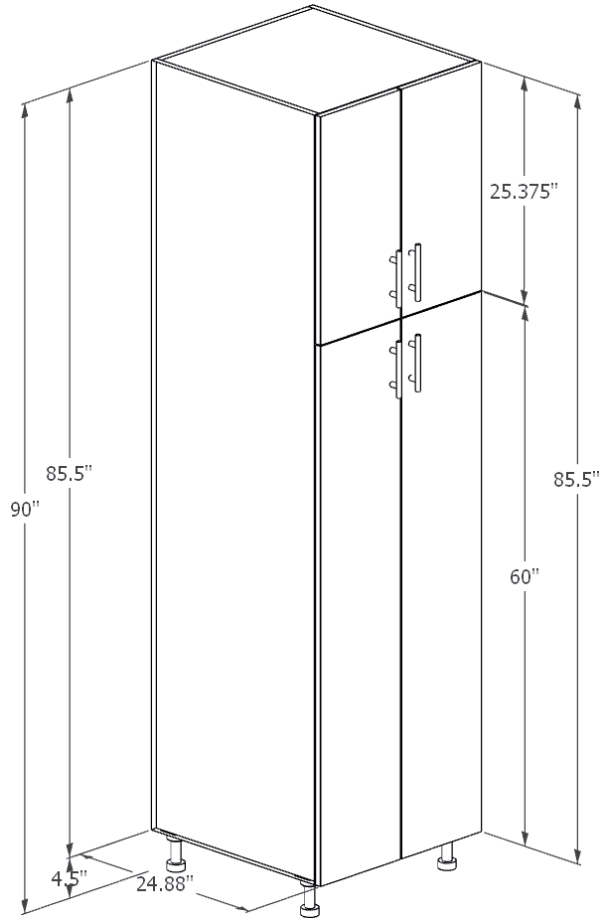

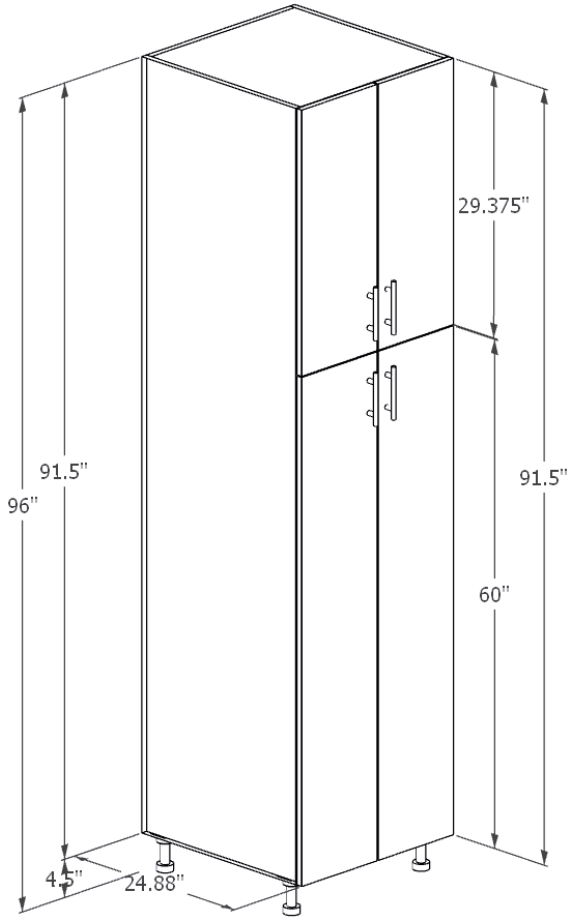

Tall Oven Cabinets - TTxxxx-24: 2 Doors, 2 Drawers

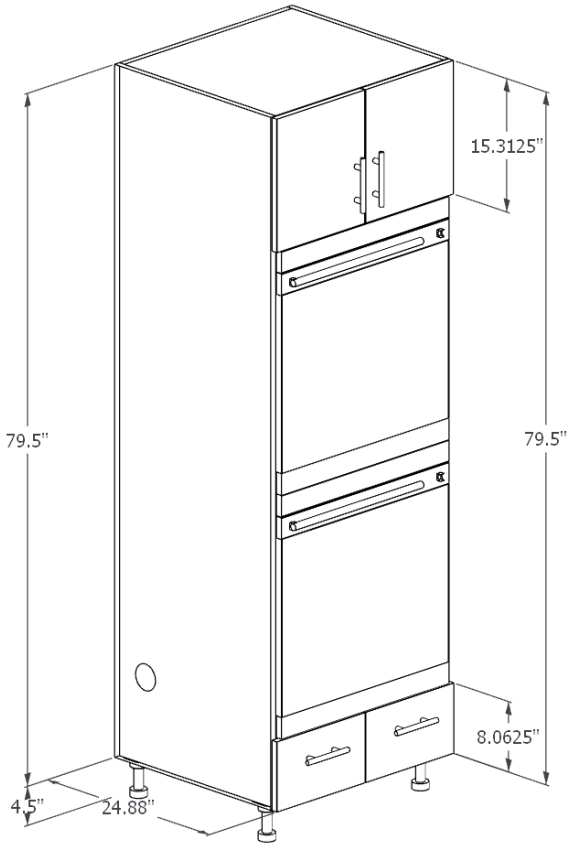

Product Description		
TTxxyy: Tall Oven Cabinet, 24" depth 2 Upper Doors, 2 Lower Drawers. Specify ovens being used.		
84” Tall	90” Tall	96” Tall
TT2784-24	TT2790-24	TT2796-24
TT3084-24	TT3090-24	TT3096-24
TT3384-24	TT3390-24	TT3396-24
TT3684-24	TT3690-24	TT3696-24

Product Description		
TTxxyy: Tall Oven Cabinet, 27" depth 2 Upper Doors, 2 Lower Drawers. Specify ovens being used.		
84” Tall	90” Tall	96” Tall
TT3384	TT3390	TT3396
TT3684	TT3690	TT3696

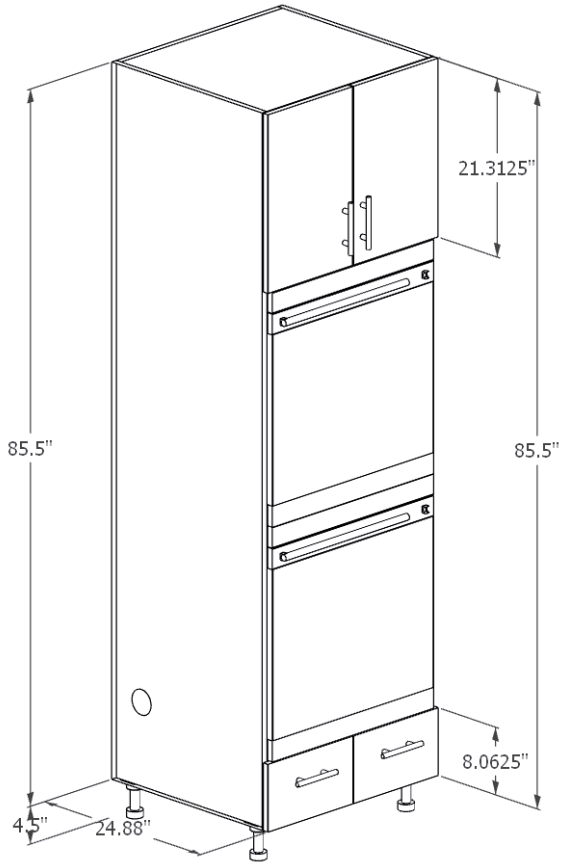

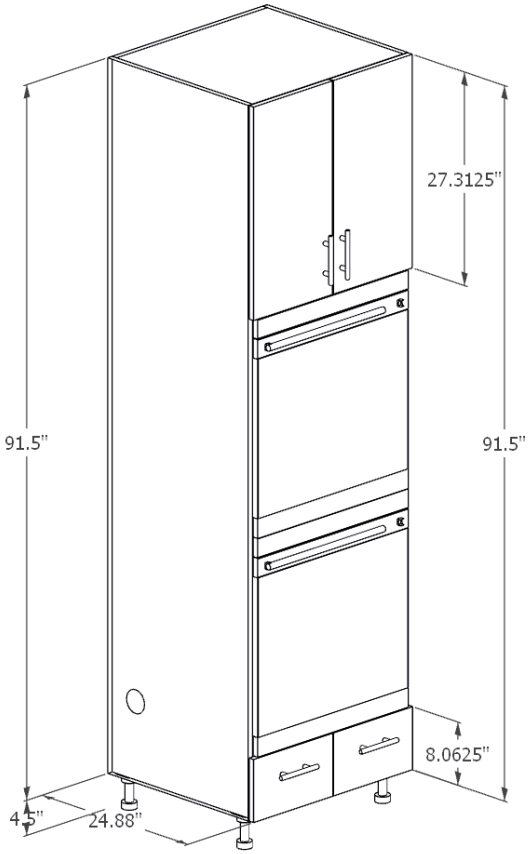

Tall Cabinet Accessories - Fillers: TFLF

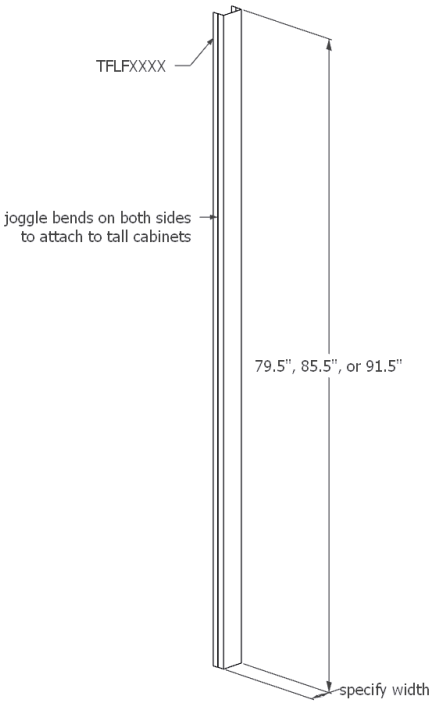

Product Description
TFLF: Tall base cabinet front filler for use with tall storage bases and tall oven bases. Sits flush with door/drawer faces. 1"W minimum, available in 1/8" increments as needed. Specify width and tall base height. Example SKUs: TFLF 2.88 84 TFLF 4.50 96

27" Depth SKU	Description
TFLF03XX	3"W Tall Front Filler. Specify 84", 90", or 96" height.
TFLF04XX	4"W Tall Front Filler. Specify 84", 90", or 96" height.
TFLFXXXX	Custom width Tall Front Filler. Engineering charges may apply. Contact Sales for more information. XX" Wide x XX" High

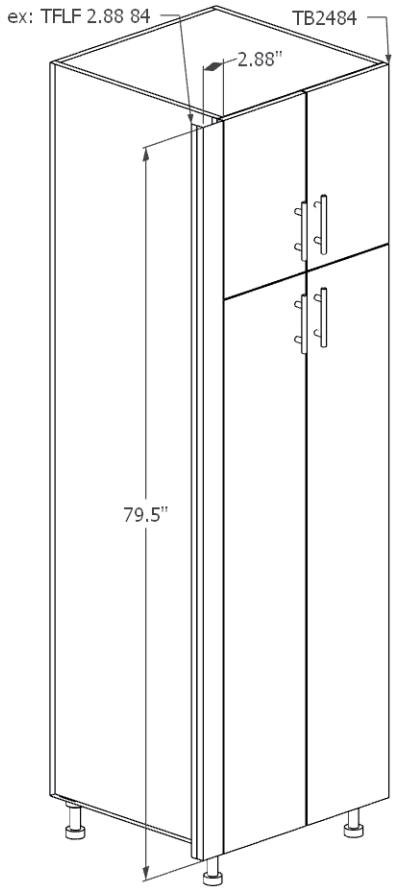

Tall Cabinet Accessories - Side Panels: OSPT xxxxL/R

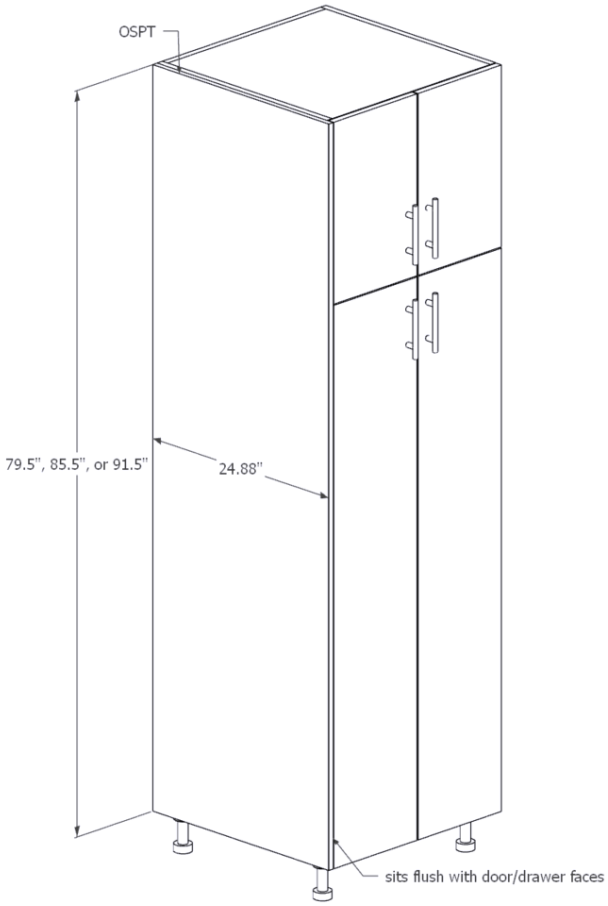

Product Description		
OSPT: ¾" Thick tall base side panel for tall storage bases and tall oven bases, 24.88"W x XX"H, sits flush with door/drawer faces, specify tall base height and side.		
SKU		
84"H Cabinet	90"H Cabinet	96"H Cabinet
OSPT 2484L	OSPT 2490L	OSPT 2496L
OSPT 2484R	OSPT 2490R	OSPT 2496R

Product Description		
OSPT: ¾" Thick tall base side panel for tall storage bases and tall oven bases, 27.88"W x XX"H, sits flush with door/drawer faces, specify tall base height and side.		
SKU		
84"H Cabinet	90"H Cabinet	96"H Cabinet
OSPT 2784L	OSPT 2790L	OSPT 2796L
OSPT 2784R	OSPT 2790R	OSPT 2796R

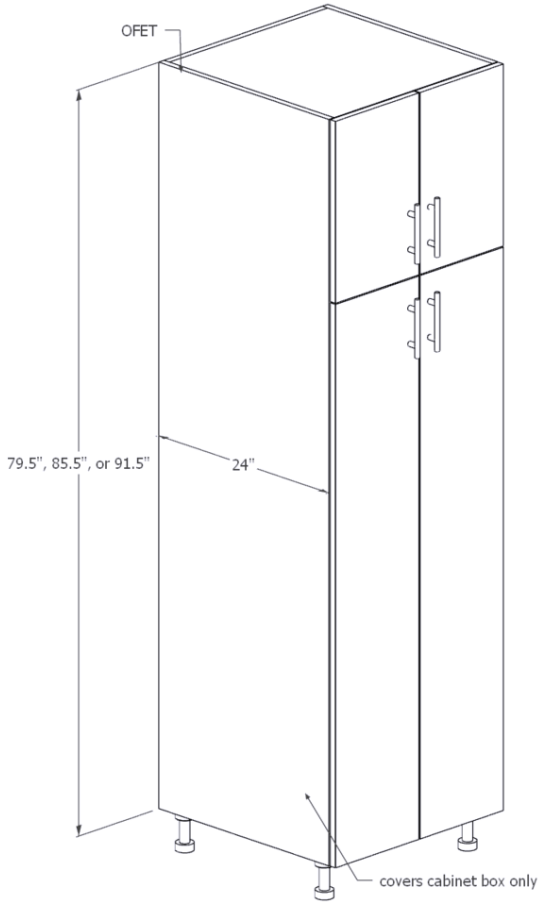

Product Description		
OFET: Tall base flush side panel for tall storage bases and tall oven bases, 24"W x XX"H, sits flush to cabinet side, specify tall base height and side.		
SKU		
84"H Cabinet	90"H Cabinet	96"H Cabinet
OFET 2484L	OFET 2490L	OFET 2496L
OFET 2484R	OFET 2490R	OFET 2496R

Product Description		
OFET: Tall base flush side panel for tall storage bases and tall oven bases, 27"W x XX"H, sits flush to cabinet side, specify tall base height and side.		
SKU		
84"H Cabinet	90"H Cabinet	96"H Cabinet
OFET 2784L	OFET 2790L	OFET 2796L
OFET 2784R	OFET 2790R	OFET 2796R

Cabinet Accessories - Half and Full-Depth Shelves: OSH

We offer a variety of different shelving options including half-depth, full-depth, pullout, and heavy duty pullout shelves for ice chests. NOTE: Appliance shelves are installed in FIXED position and cannot be adjusted.

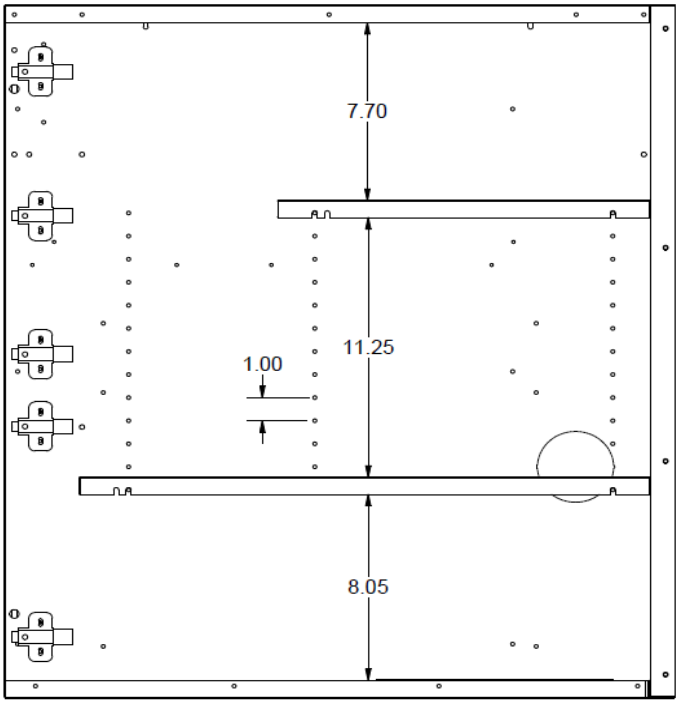

Stationary Shelf Spacing

Product Description
OSHxx: Half-Depth Shelves, 15" deep.
27” Depth SKU
OSH12
OSH15
OSH16.5 (for 33”W grill bases)
OSH18
OSH19.3 (for 58”W grill bases)
OSH20.7 (for 62”W grill bases)
OSH21
OSH24
OSH27
OSH30
OSH33
OSH36
OSH39
OSH42
OSH45
OSH48

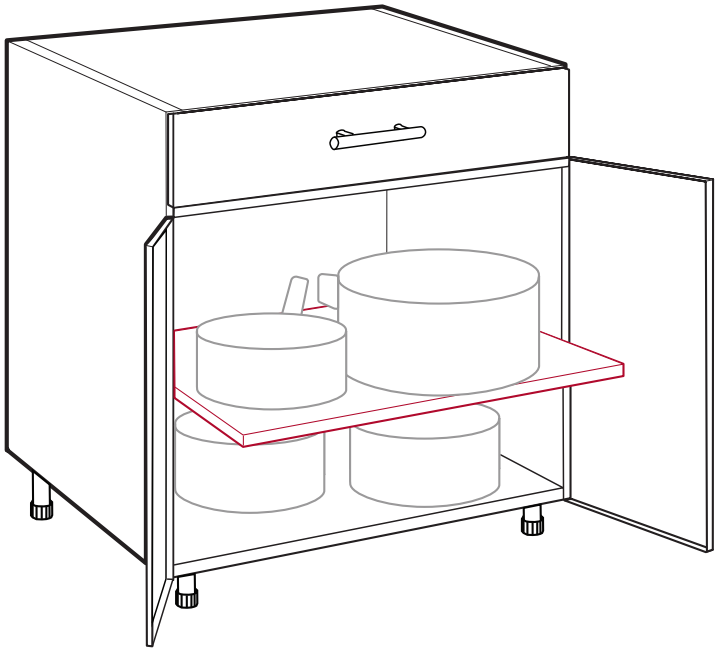

Product Description	
OSHxxyy: Full-Depth shelves (24" or 27" deep)	
27” Depth SKU	**24” Depth SKU**
OSH1227	OSH1224
OSH1527	OSH1524
OSH16.5-27	OSH16.5-24
OSH1827	OSH1824
OSH2127	OSH2124
OSH22.5-27	OSH22.5-24
OSH2427	OSH2424
OSH2727	OSH2724
OSH3027	OSH3024
OSH3327	OSH3324
OSH3627	OSH3624
OSH3927	OSH3924
OSH4227	OSH4224
OSH4527	OSH4524
OSH4827	OSH4824

Cabinet Accessories - Pullout Shelving

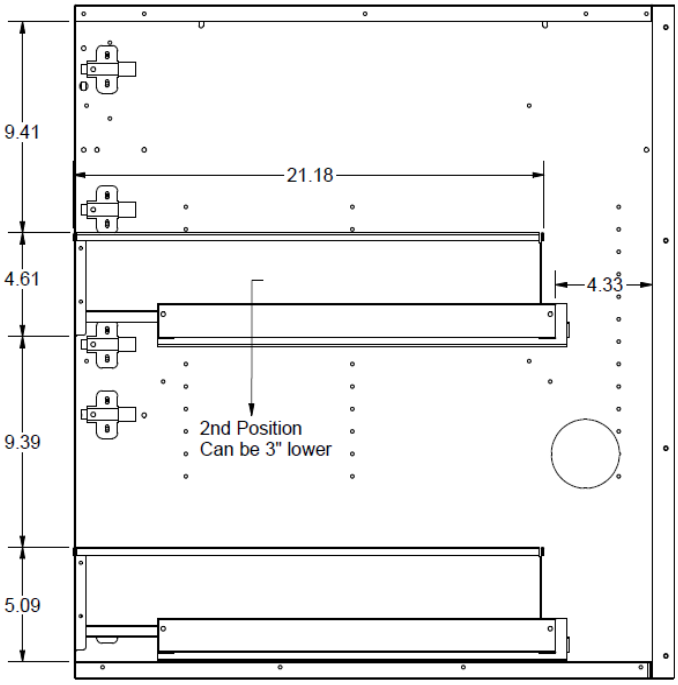

Pullout Shelf Spacing

Product Description
OSHxxP: Pullout Shelf
Pullout SKU
OSH12P
OSH15P
OSH16.5P (for 33”W grill bases)
OSH18P
OSH19.3P (for 58”W grill bases)
OSH19.5P (for 39"W grill bases)
OSH20.7P (for 62”W grill bases)
OSH22.5P (for 45"W grill bases)
OSH21P
OSH24P
OSH27P
OSH30P
OSH33P
OSH36P
OSH39P
OSH42P
OSH45P
OSH48P

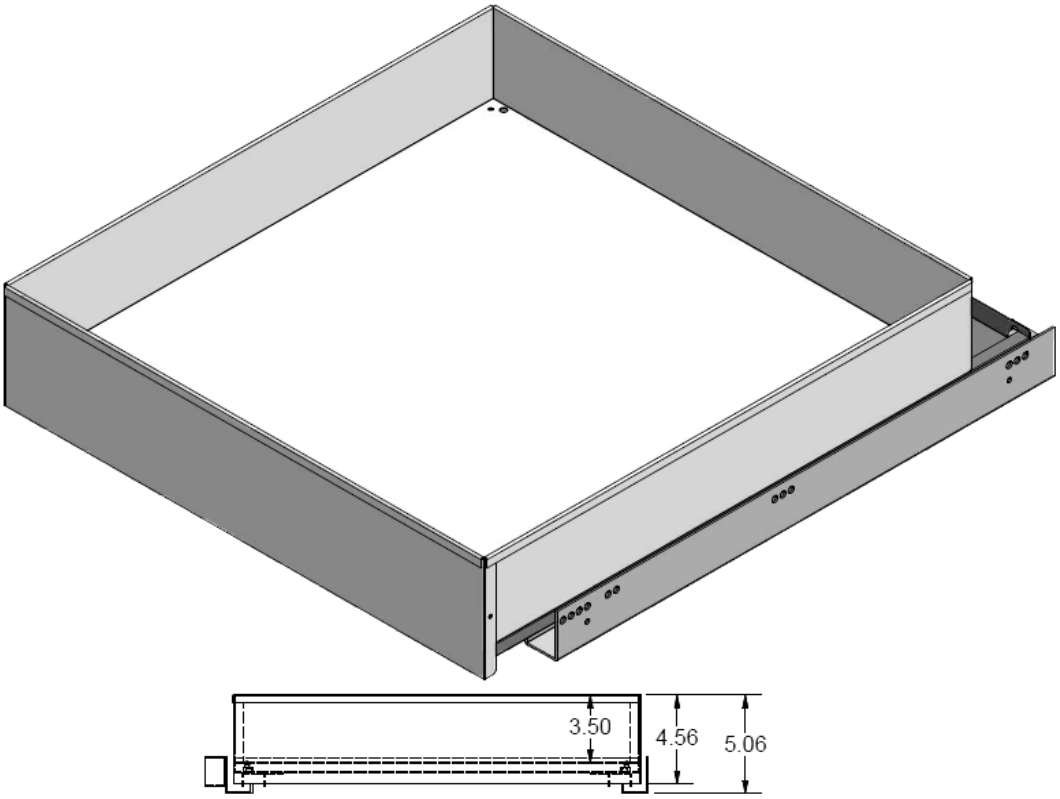

Cabinet Accessories - Pullout Ice Chest

Product Description
OSHxxPCHEST: Pullout Shelf with heavy duty glides, designed for ice chests, can hold up to 132 lbs.
27” and 24” Depth SKU
OSH21PCHEST
OSH24PCHEST
OSH27PCHEST
OSH30PCHEST
OSH33PCHEST
OSH36PCHEST
OSH39PCHEST
OSH42PCHEST
OSH45PCHEST
OSH48PCHEST

Ex. OSH36PCHEST, installs in 36"W cabinet

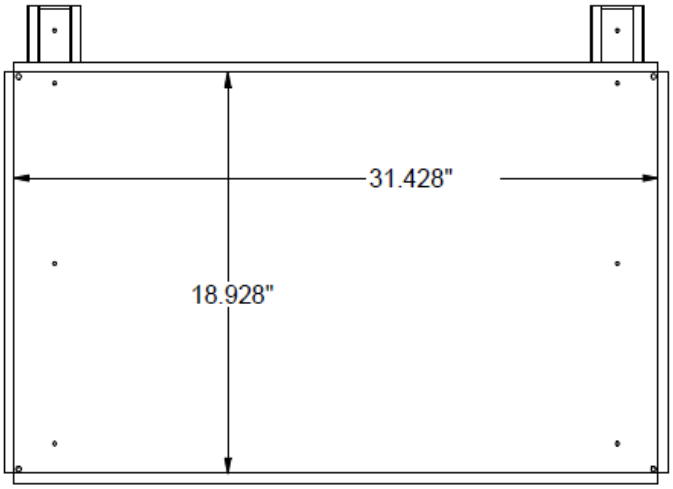

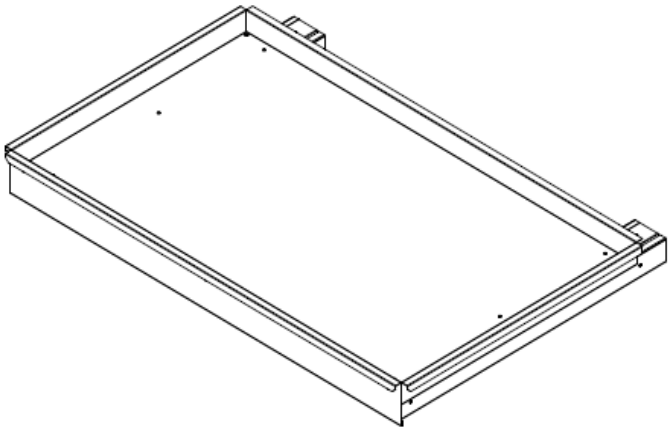

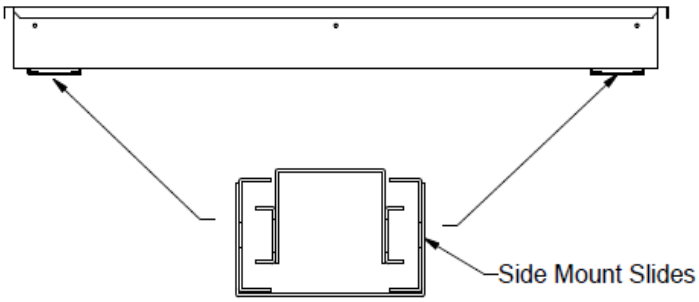

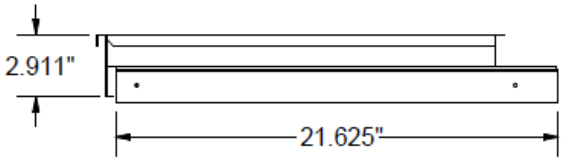

Cabinet Accessories - Trash Pullout: OTP

Ex. OTP24, installs in 24"W cabinet

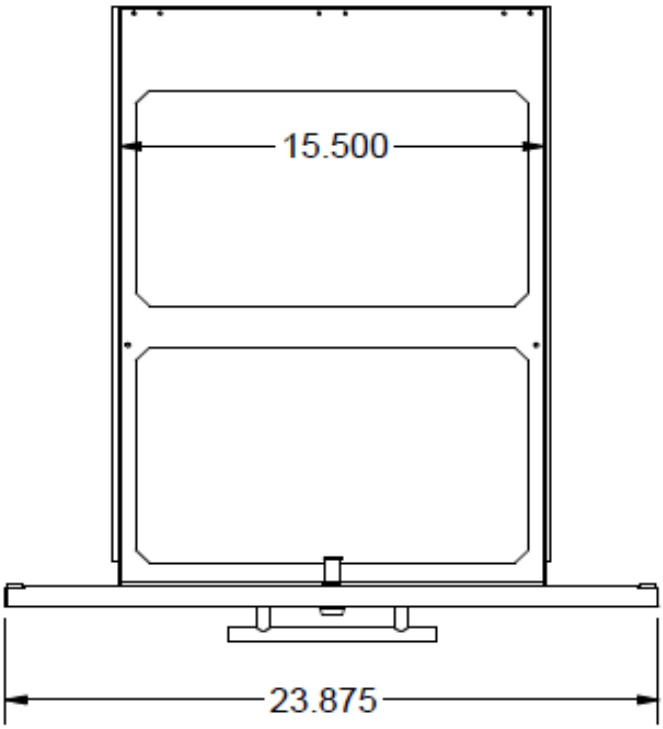

Note: optional lock shown at top on both trash pullout images.

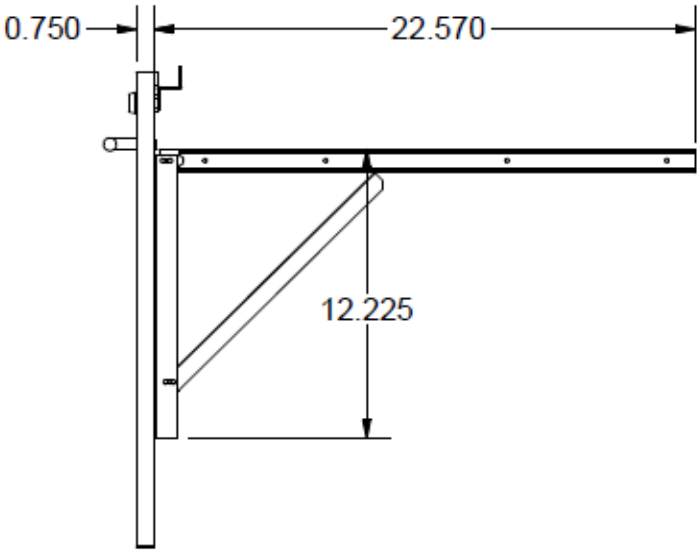

Product Description
OTPxx and OTPxxD: 28 quart Trash pullout accessory. Designed to fit 15 - 24" wide OBF, OBD, OBB Side Burner cabinets and 33"W, 36"W, 42"W and 48"W Grill Cabinets.

SKU	Description
OTP15	Single Trash for 15" cabinet or 1 side of 30" Grill cabinet
OTP15D	Single Trash for 15" cabinet or 1 side of 30" Grill cabinet, Deep
OTP16.5	Single Trash for 1 side of 33" Grill cabinet
OTP16.5D	Single Trash for 1 side of 33" Grill cabinet, Deep
OTP18	Double Trash for 18" cabinet or 36" Grill - side burner
OTP18D	Double Trash for 18" cabinet or 36" Grill - side burner, Deep
OTP19.33	Double Trash for 58" Grill cabinet
OTP19.33D	Double Trash for 58" Grill cabinet, Deep
OTP20.67	Double Trash for 62" Grill cabinet
OTP20.67D	Double Trash for 62" Grill cabinet, Deep
OTP21	Double Trash for 21" cabinet or 1 side of 42" Grill cabinet
OTP21D	Double Trash for 21" cabinet or 1 side of 42" Grill cabinet, Deep
OTP24	Double Trash
OTP24D	Double Trash Deep
OTP27	Double Trash
OTP27D	Double Trash, Deep
OTP30	Double Trash
OTP30D	Double Trash, Deep
OTP33	Double Trash
OTP33D	Double Trash, Deep

Cabinet Accessories - Propane Pullout: OPPxx

Product Description	
OPPxx: Propane pullout accessory Designed to fit 18 - 30” wide OBB Side Burner cabinets and 33”-62"W OGB Grill Cabinets. **CANNOT BE USED FOR LOW AND DEEP CABINETS!**	
SKU	**Description**
OPP16.5	Propane Pullout for 1 side of 33″ Grill Base
OPP18	Propane Pullout for 18″ OBB or 36"/54" Grill Base
OPP19.33	Propane Pullout for 58″ Grill cabinet
OPP20.67	Propane Pullout for 62″ Grill cabinet
OPP21	Propane Pullout for 21″ OBB or 1 side of 42″ Grill Base
OPP24	Propane Pullout for 24" OBB or 1 side of 48" Grill Base
OPP27	Propane Pullout for 27" OBB Side Burner Base
OPP30	Propane Pullout for 30" OBB Side Burner base

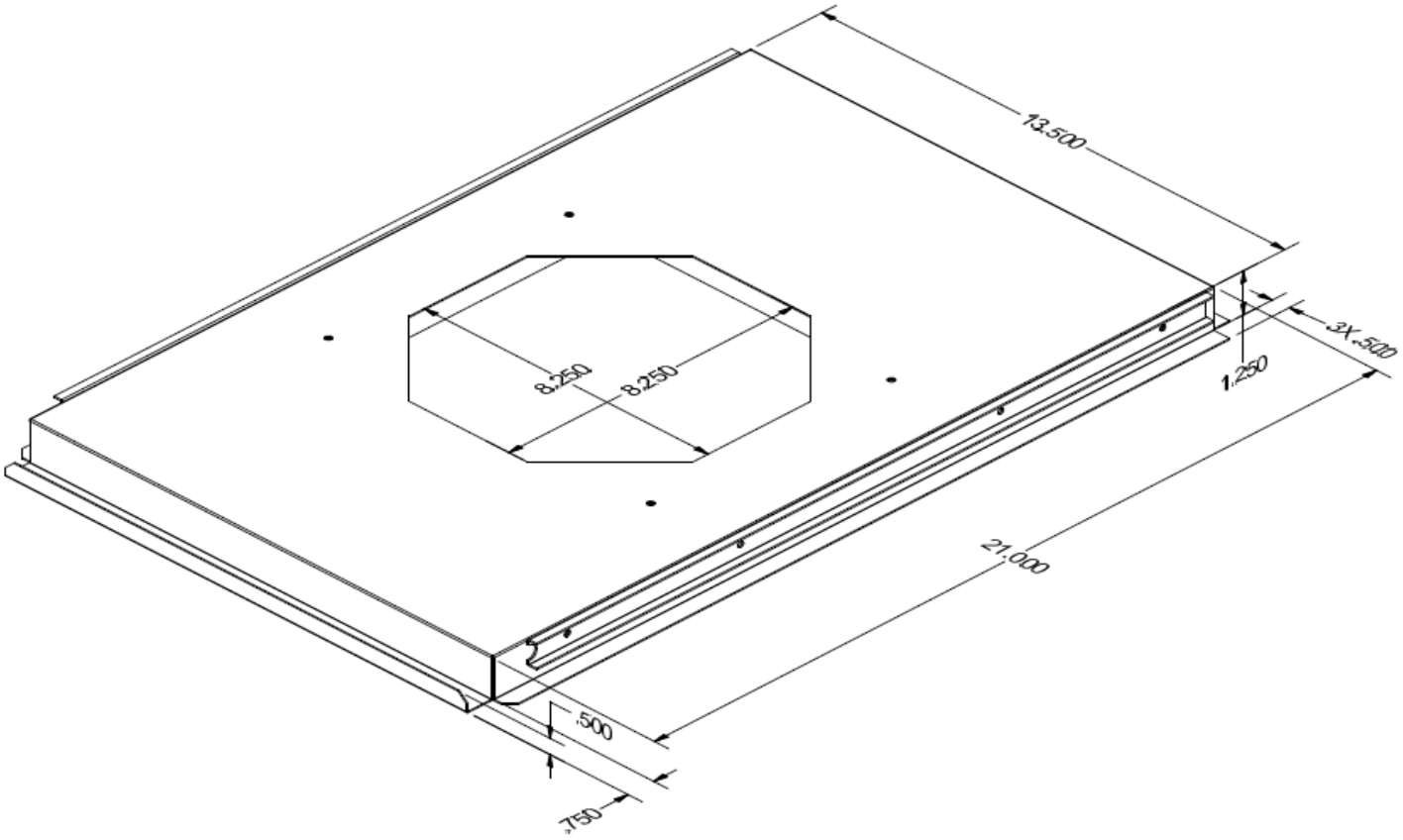

Cabinet Accessories - Undercounter Appliance Parts

We offer a variety of different options for designing corners, void spaces, and undercounter appliance areas.

See example below for how to fill a corner void to place refrigerator at end of run.

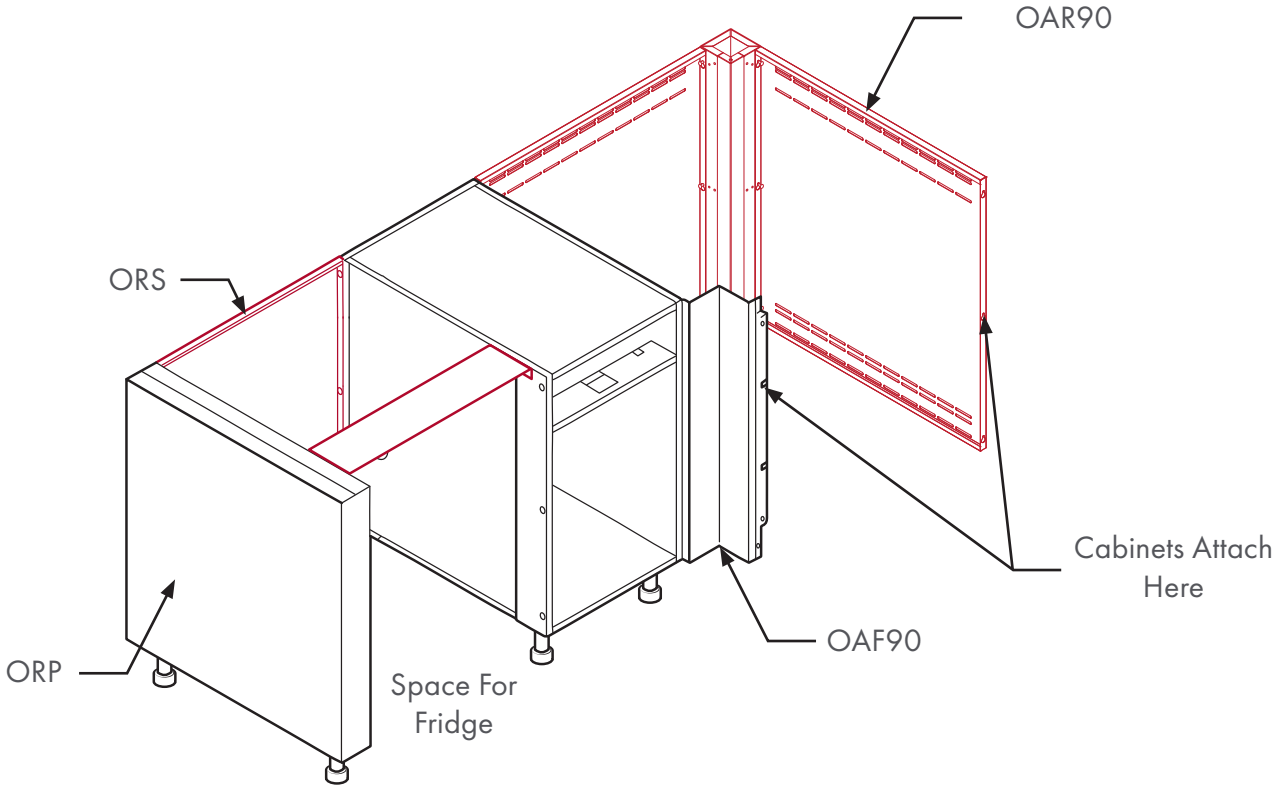

Example of how to place refrigerator next to corner.

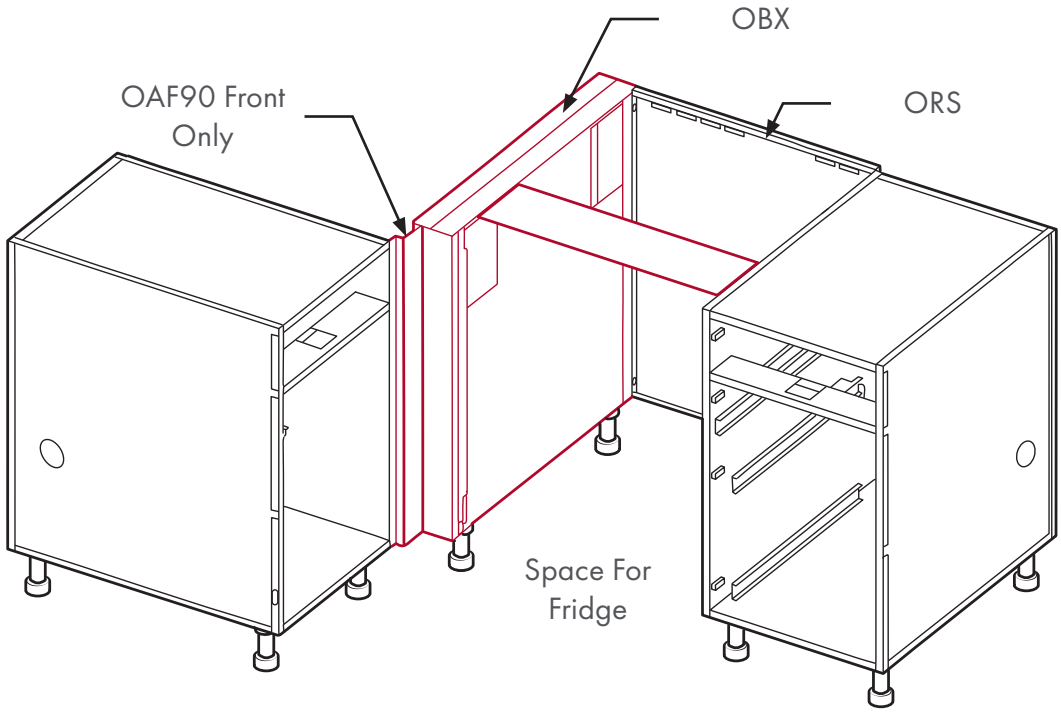

Cabinet Accessories - Undercounter Appliance Spacers: ORS

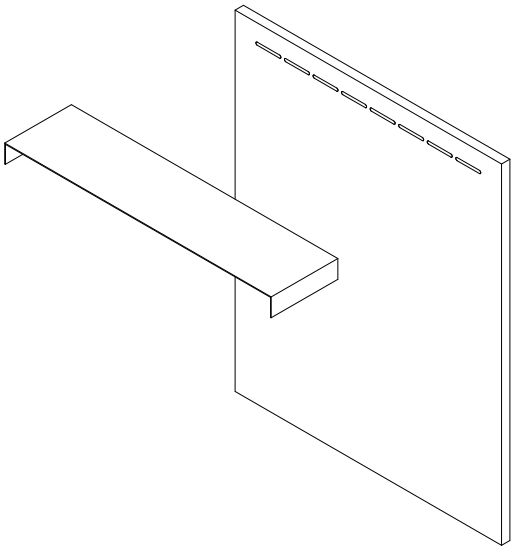

EXAMPLE:
ORS24.25 used as a spacer, creating an opening for an appliance, attached between a cabinet and an ORP column.

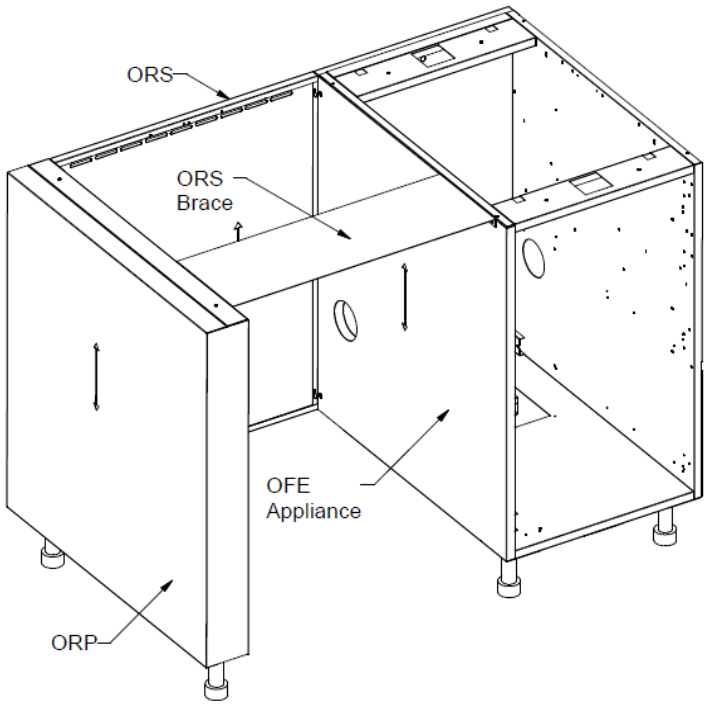

ORS Brace ships with the ORS. OFE Appliance panel(s) must be ordered to install the brace. If OFE Appliance panel(s) is not ordered the brace can be discarded, but the customer must secure the ORP.

Product Description
ORSxx: Rear vented spacer panel used to "lock-in" exact size opening for undercounter appliances. Used as a back panel for undercounter appliance space when needed. Available in 1/8" increments, custom widths available, contact Sales for information. Non-Vented versions of all sizes are available. Attaches between two cabinets, two ORP or OBX columns, or a cabinet and ORP or OBX.

Vented SKU	Non-Vented SKU
ORS15	ORS15 NV
ORS15.25	ORS15.25 NV
ORS15.50	ORS15.50 NV
ORS18	ORS18 NV
ORS18.25	ORS18.25 NV
ORS20.25	ORS20.25 NV
ORS20.50	ORS20.50 NV
ORS20.75	ORS20.75 NV
ORS21	ORS21 NV
ORS21.25	ORS21.25 NV
ORS21.75	ORS21.75 NV
ORS22	ORS22 NV
ORS22.25	ORS22.25 NV
ORS23	ORS23 NV
ORS23.75	ORS23.75 NV
ORS24	ORS24 NV
ORS24.25	ORS24.25 NV
ORS24.50	ORS24.50 NV
ORS24.75	ORS24.75 NV
ORS26.25	ORS26.25 NV
ORS27.25	ORS27.25 NV
ORS28.25	ORS28.25 NV
ORS28.50	ORS28.50 NV
ORS29	ORS29 NV
ORS30	ORS30 NV
ORS30.25	ORS30.25 NV
ORS30.75	ORS30.75 NV
ORS31.50	ORS31.50 NV
ORS33	ORS33 NV
ORS36	ORS36 NV
ORS36.38	ORS36.38 NV
ORS38	ORS38 NV
ORS39	ORS39 NV
ORS39.38	ORS39.38 NV
ORS48	ORS48 NV

Cabinet Accessories - Countertop Support Columns: ORP/OBX

ORP has cutouts on one side and is finished on front, back, and one side. Reversible for application on either end of a run.

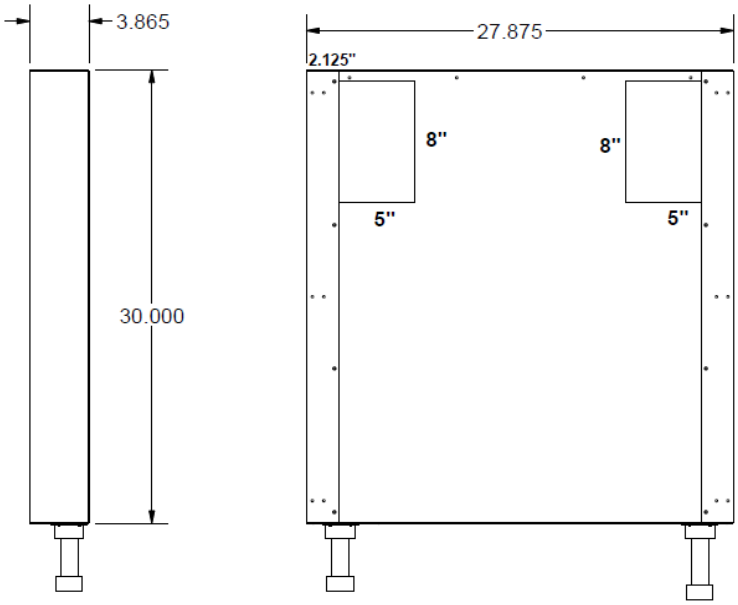

OBX has cutouts on both sides, finished on front and back only.

If a custom width is required for an ORP or an OBX, please contact sales to discuss.

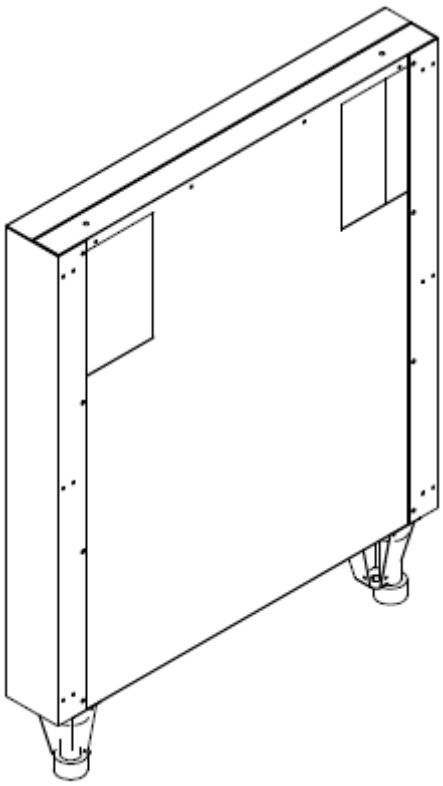

Iso view, shown with SSLEG

Product Description
ORPxx.xx y.yy: Column for countertop support with one finished side for ending a run with an undercounter appliance. Attaches to a cabinet or another column via an ORS panel. Comes in two standard widths and four standard depths to match cabinets with or without back panels. Can be upgraded to match door styles on finished side. Comes with two adjustable legs to match those on cabinetry. Example SKU: ORP27.88 2.88 A tapered SSLEG can only be used with 3.88″ widths.

SKU		
Prefix	Depth	Width
ORP	24.88	2.88
ORP	24.88	3.88
ORP	25.63	2.88
ORP	25.63	3.88
ORP	27.88	2.88
ORP	27.88	3.88
ORP	28.63	2.88
ORP	28.63	3.88
ORP	29.88	2.88
ORP	29.88	3.88
ORP	30.63	2.88
ORP	30.63	3.88

Product Description
OBXxx.xx y.yy: Column for countertop support for the middle of a run with an undercounter appliance. Attaches to a cabinet or another column via an ORS panel. Comes in two standard widths and four standard depths to match cabinets with or without back panels. Comes with two adjustable legs to match those on cabinetry. Example SKU: OBX27.88 2.88 A tapered SSLEG can only be used with 3.88″ widths.

SKU		
Prefix	Depth	Width
OBX	24.88	2.88
OBX	24.88	3.88
OBX	25.63	2.88
OBX	25.63	3.88
OBX	27.88	2.88
OBX	27.88	3.88
OBX	28.63	2.88
OBX	28.63	3.88
OBX	29.88	2.88
OBX	29.88	3.88
OBX	30.63	2.88
OBX	30.63	3.88

Cabinet Accessories - ORP/OBX with electrical cutout

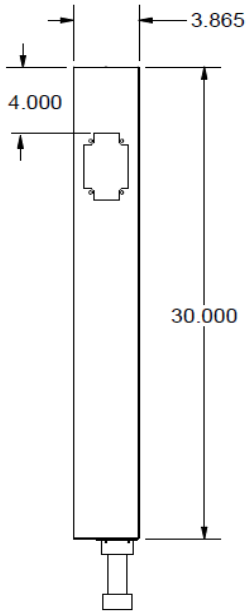

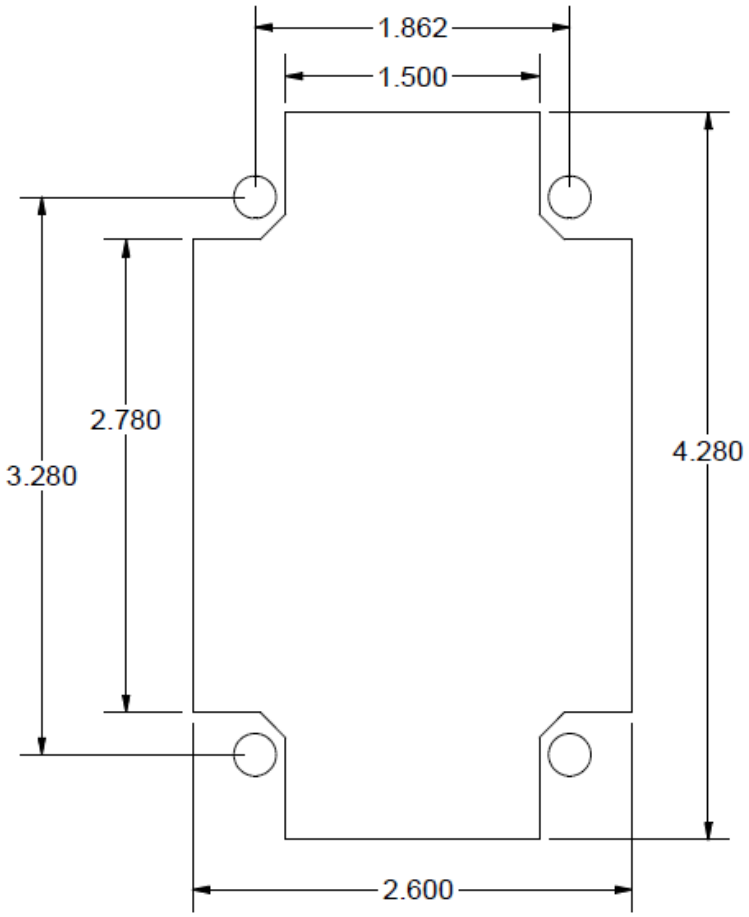

Product Description
ORPxx.xx y.yy(L or R) ELEC:
Same as standard ORP, but with a standard GFCI electrical cutout located 4” down from the top of the column and centered on front. Left and Right SKUs as cutout negates reversibility.
*GFCI Outlet Box not provided.
Example SKU: ORP27.88 3.88 ELEC

SKU		
Prefix	Depth	Width/Side
ORP	24.88	3.88L ELEC
ORP	24.88	3.88R ELEC
ORP	25.63	3.88L ELEC
ORP	25.63	3.88R ELEC
ORP	27.88	3.88L ELEC
ORP	27.88	3.88R ELEC
ORP	28.63	3.88L ELEC
ORP	28.63	3.88R ELEC
ORP	29.88	3.88L ELEC
ORP	29.88	3.88R ELEC
ORP	30.63	3.88L ELEC
ORP	30.63	3.88R ELEC

Product Description
OBXxx.xx y.yy ELEC:
Same as standard OBX, but with a standard GFCI electrical cutout located 4” down from the top of the column and centered on front.
*GFCI Outlet Box not provided.
Example SKU: OBX27.88 3.88 ELEC

SKU		
Prefix	Depth	Width
OBX	24.88	3.88 ELEC
OBX	25.63	3.88 ELEC
OBX	27.88	3.88 ELEC
OBX	28.63	3.88 ELEC
OBX	29.88	3.88 ELEC
OBX	30.63	3.88 ELEC

Cabinet Accessories - ORP/OBX for OCS Countertop Support

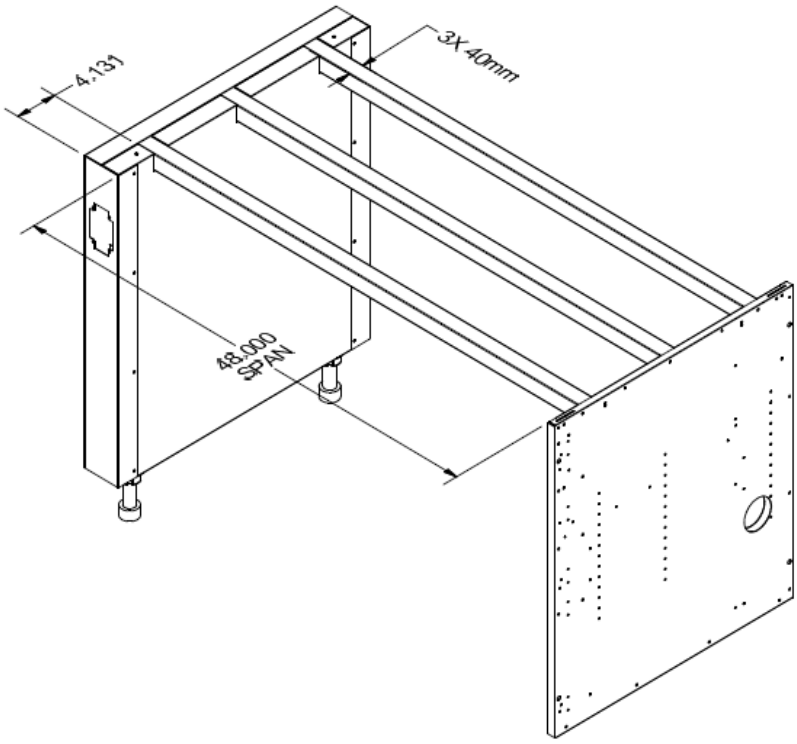

Product Description
ORPxx.xx y.yy OCS, ORPxx.xx y.yy(L or R) OCS ELEC: Same as standard ORP, but with notches for OCS extrusions. Left and Right SKUs as cutout negates reversibility. Also available with electrical cutout. Example SKU: ORP27.88 2.88 OCS Example SKU: ORP28.63 3.88R OCS ELEC

SKU		
Prefix	Depth	Width
ORP	24.88	2.88 OCS
ORP	24.88	3.88 OCS
ORP	24.88	3.88L OCS ELEC
ORP	24.88	3.88R OCS ELEC
ORP	25.63	2.88 OCS
ORP	25.63	3.88 OCS
ORP	25.63	3.88L OCS ELEC
ORP	25.63	3.88R OCS ELEC
ORP	27.88	2.88 OCS
ORP	27.88	3.88 OCS
ORP	27.88	3.88L OCS ELEC
ORP	27.88	3.88R OCS ELEC
ORP	28.63	2.88 OCS
ORP	28.63	3.88 OCS
ORP	28.63	3.88L OCS ELEC
ORP	28.63	3.88R OCS ELEC
ORP	29.88	2.88 OCS
ORP	29.88	3.88 OCS
ORP	29.88	3.88L OCS ELEC
ORP	29.88	3.88R OCS ELEC
ORP	30.63	2.88 OCS
ORP	30.63	3.88 OCS
ORP	30.63	3.88L OCS ELEC
ORP	30.63	3.88R OCS ELEC

Cabinet Accessories - ORP Decorative Side Panels

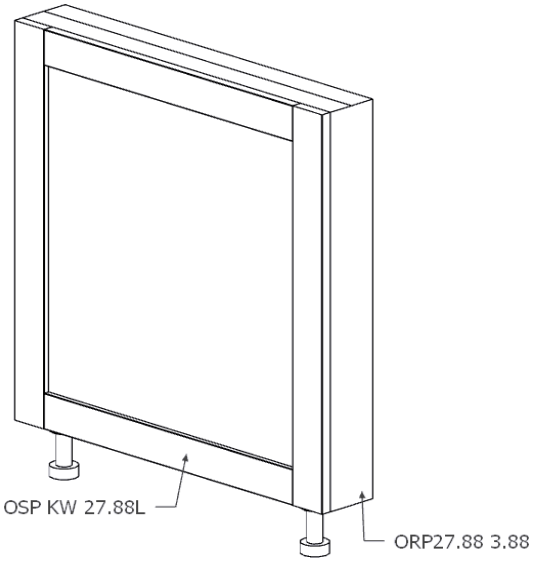

ORP with Key West Panel side panel

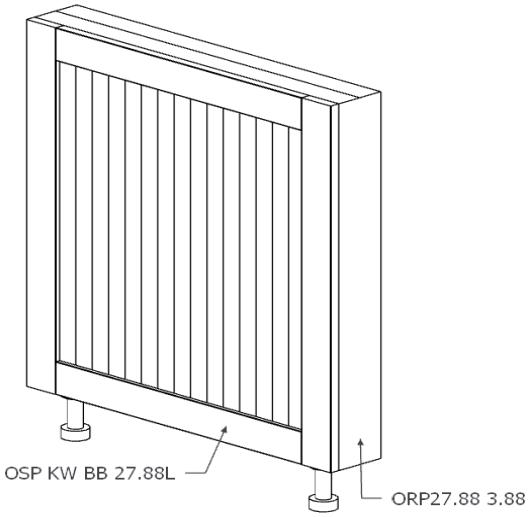

ORP with Key West Beadboard side panel

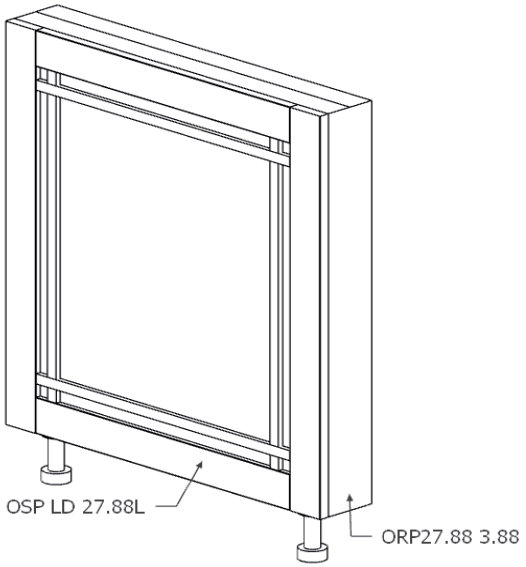

ORP with London side panel

Product Description
OSP: Decorative side panels to match door styles are available for installation on ORP columns. These are also able to installed on the side of cabinets to finish them.
KW: Key West Panel
KW SG: Key West Seaglass Center
KW BB: Key West Beadboard
KW LV: Key West Louvered
KW TX: Key West Textured Center
VN: Venice
LD: London
NP: Newport
PB: Palm Beach Panel
PB SG: Palm Beach Seaglass Center
PB TX: Palm Beach Textured Center
Example SKU: OSP KW BB 27.88

SKU		
Prefix	**Style**	**Widths**
OSP	KW	24.88, 25.63, 27.88, 28.63
OSP	KW SG	24.88, 25.63, 27.88, 28.63
OSP	KW BB	24.88, 25.63, 27.88, 28.63
OSP	KW LV	24.88, 25.63, 27.88, 28.63
OSP	VN	24.88, 25.63, 27.88, 28.63
OSP	LD	24.88, 25.63, 27.88, 28.63
OSP	NP	24.88, 25.63, 27.88, 28.63
OSP	PB	24.88, 25.63, 27.88, 28.63
OSP	PB SG	24.88, 25.63, 27.88, 28.63

Cabinet Accessories - ORP Depth Skin: ORPS

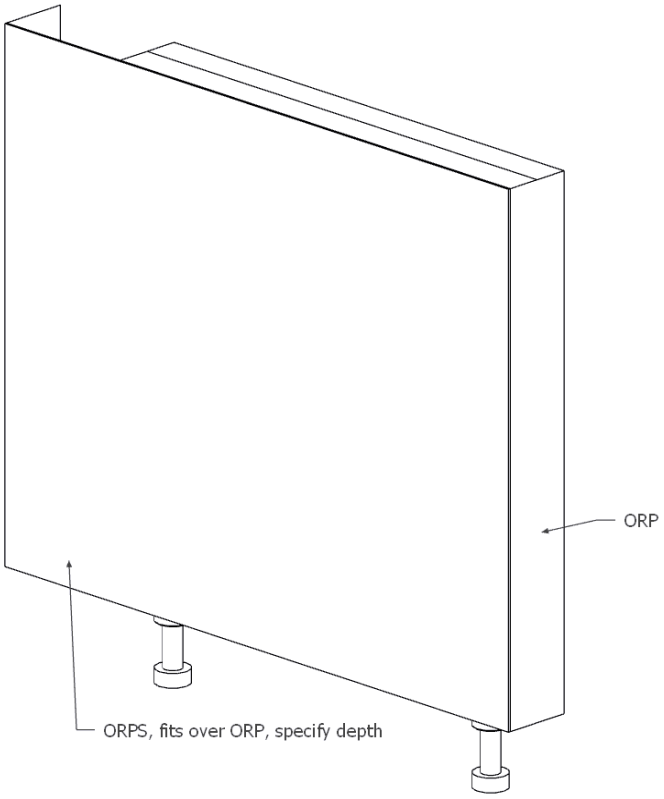

Product Description
ORPS: Left/Right skin that connects over an ORP to increase depth. **NOTE: Custom sizes created as needed. List width of ORP that the skin is attaching to followed by the depth increase.** **Example: ORPS27.88 2.88 (=ORP width) 3.00 (=depth increase)**

27” Depth SKU	Description
ORPSXX XX XXL	Custom Left skin to connect to increase depth of ORP (first two dimensions are ORP depth and width).
ORPSXX XX XXR	CUSTOM Right skin to connect to increase depth of ORP (first two dimensions are ORP depth and width).

OBX Width Skin: OBXF

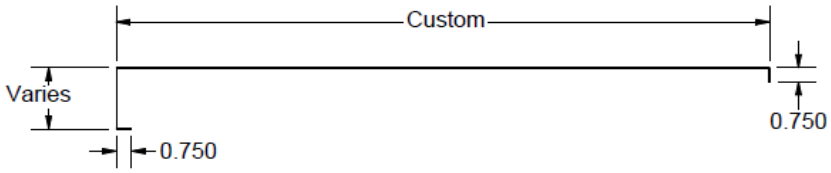

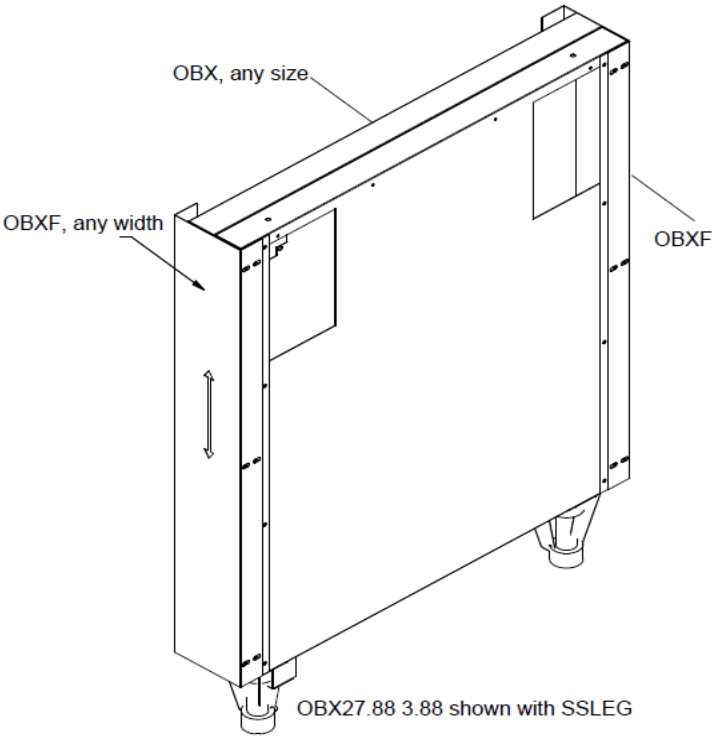

Product Description
OBXF: Skins that connect over the front and back of an OBX to increase width. Order 2 if a filler is needed for both the front and back of the OBX. NOTE: Available in any width in 1/8” increments. Some SKUs already programmed, see table below. Use OBXF XX for custom sizes as needed.

27” Depth SKU	Description
OBXF 3.00	3.00”W Skin
OBXF 3.50	3.50”W Skin
OBXF 3.88	3.88”W Skin
OBXF 4.75	4.75”W Skin
OBXF 5.25	5.25”W Skin
OBXF 5.38	5.38”W Skin
OBXF 5.63	5.63”W Skin
OBXF 5.88	5.88”W Skin
OBXF 6.00	6.00”W Skin
OBXF 6.25	6.25”W Skin
OBXF 7.25	7.25”W Skin
OBXF 8.00	8.00”W Skin
OBXF XX	Custom Width Skin

Cabinet Accessories - Corner Void Support System: OAR90xx

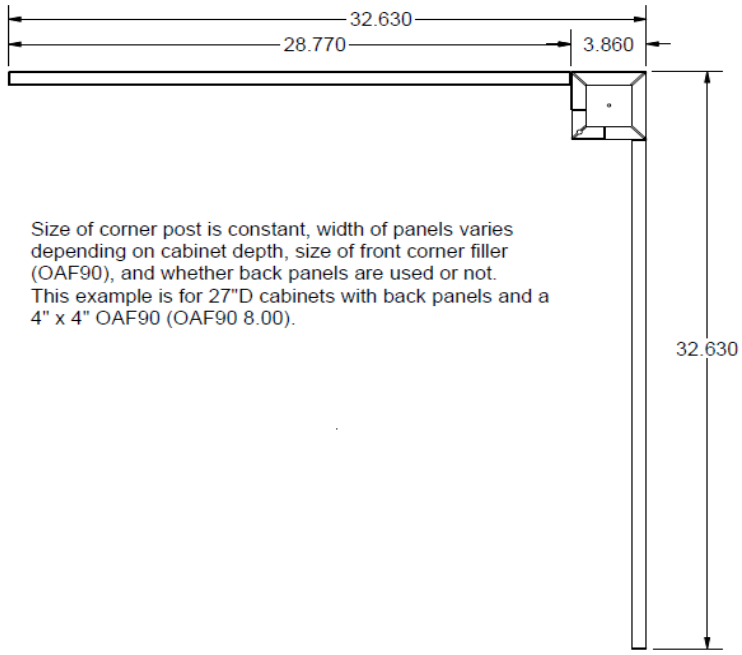

Product Description	
OAR90: Rear corner support column with two back panels to attach in void where OAF90 front base corner filler is used. Post size is constant, panel sizes are based on front base corner filler size (OAF90). Single adjustable leg on column to match those on cabinetry, can be upgraded to SSLEG.	
27" Depth SKU	Description
OAR90XX NO VENT	Solid Panels
OAR90XX VENT	Vented Panels
OAR90XX EQUAL BP VENT	galvanized and vented panels, for use with Equal Back Panels and Extened Back Panels

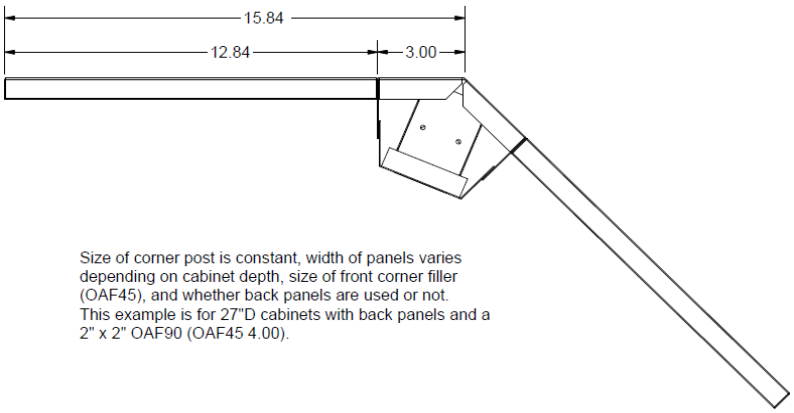

Product Description	
OAR45: Rear corner support column with two back panels to attach in void where OAF45 front base corner filler is used. Post size is constant, panel sizes are based on front base corner filler size (OAF45). Single adjustable leg on column to match those on cabinetry, can be upgraded to SSLEG.	
27" Depth SKU	Description
OAR45XX NO VENT	Solid Panels
OAR45XX VENT	Vented Panels
OAR45XX EQUAL BP VENT	Galvanized and vented panels, for use with Equal Back Panels and Extened Back Panels

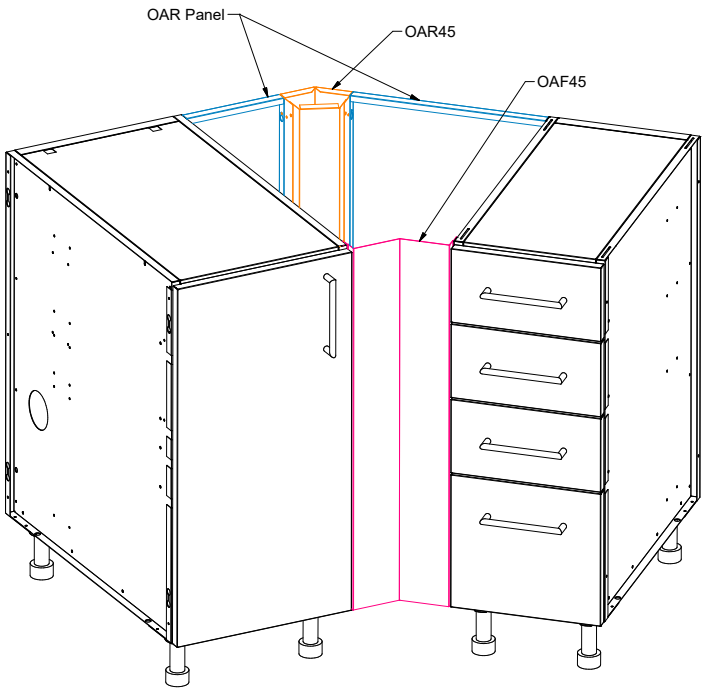

Cabinet Accessories - OAR90XX Access

Product Description	
OAR90 Access: Rear corner support column with two back panels to attach in void where OAF90 front base corner filler is used. Post size is constant, panel sizes are based on front base corner filler size (OAF90). Single adjustable leg on column to match those on cabinetry, can be upgraded to SSLEG. One of the back panels (specify which side in notes and on drawing) comes with an insert (IDR2721-2, 27''W x 21''H Frame, Two Flush Access Doors) installed into it for access into corner void. If panel size is too small for that insert, the next largest insert that can fit will be used.	
27" Depth SKU	**Description**
OAR90XX NO VENT ACCESS	Solid Panels, Insert in one panel
OAR90XX VENT ACCESS	Vented Panels, insert in one panel

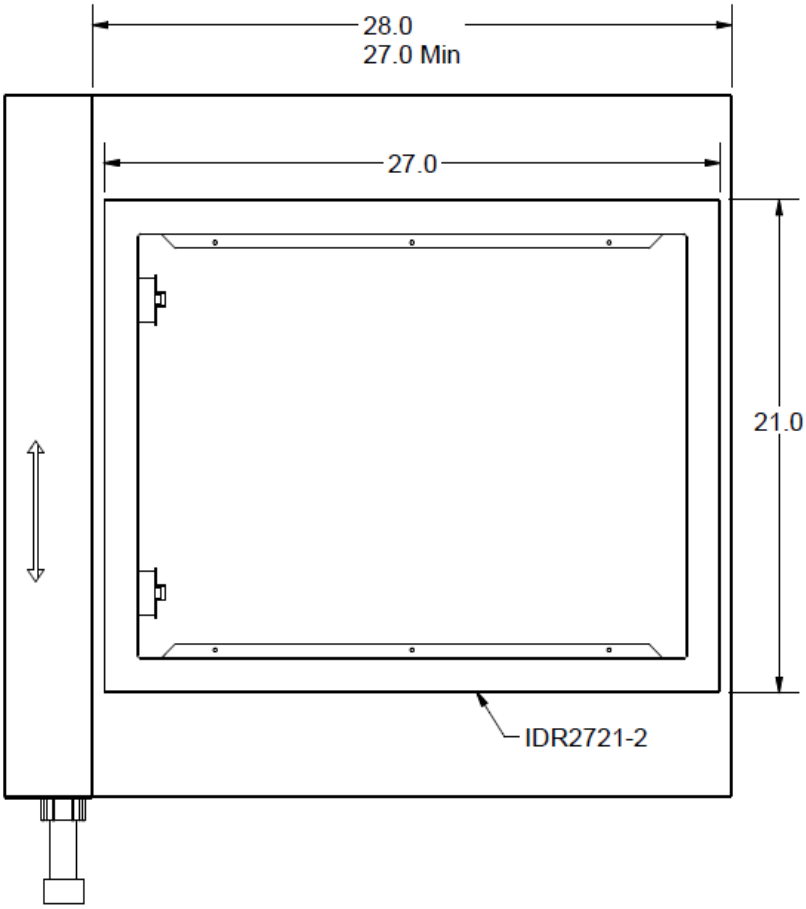

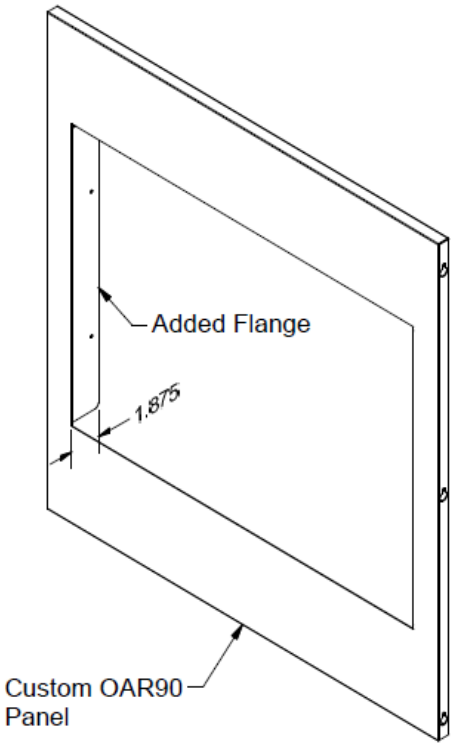

Cabinet Accessories - Front Corner Fillers: OAF90/45xx

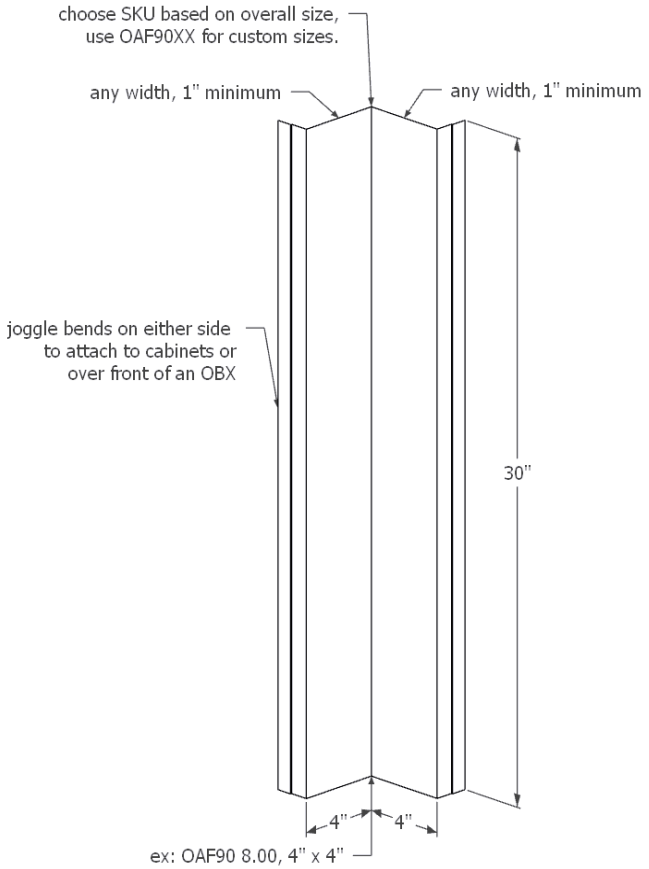

Product Description
OAF90: 90 degree front base corner filler, sits flush with door/drawer faces, attaches to two base cabinets, OBX columns, or a combination of the two depending on your design. SKUs are designated by overall filler width, specify each side of bend. 2"W overall minimum (1" minimum on either side of bend), available in 1/8" increments as needed. Note: If an OBX is used at corner for creating an undercounter appliance space, the OAF90 will attach over the OBX (see Sample Layouts sheet at the beginning of this section). Example: OAF90 8.00, 4" x 4" Example: OAF90 9.50, 3.5" x 6"
SKU
OAF90XX

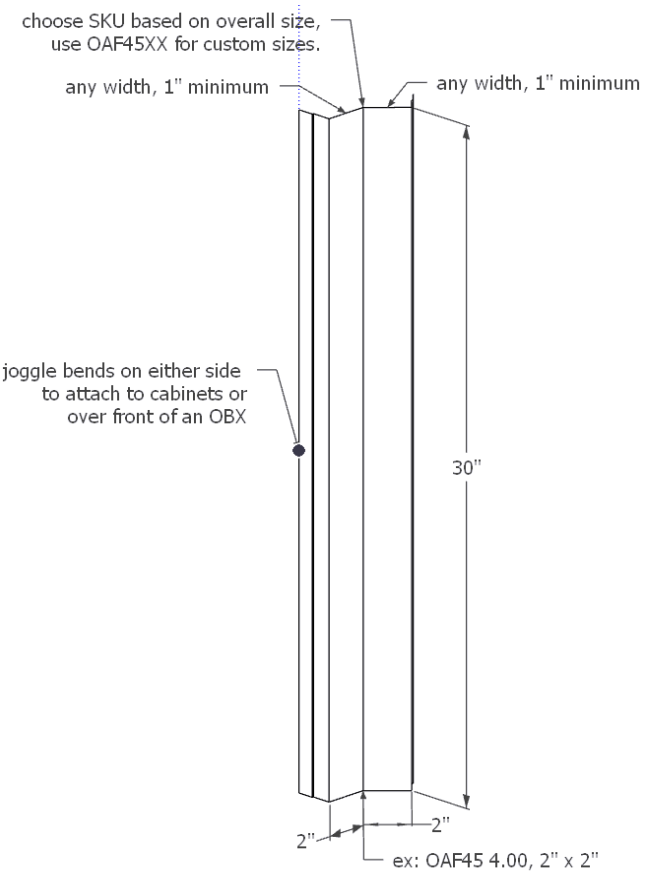

Product Description
OAF45: 45 degree front base corner filler, sits flush with door/drawer faces, attaches to two base cabinets, OBX columns, or a combination of the two depending on your design. SKUs are designated by overall filler width, specify each side of bend. 2"W overall minimum (1" minimum on either side of bend), available in 1/8" increments as needed. Note: If an OBX is used at corner for creating an undercounter appliance space, the OAF45 will attach over the OBX (see Sample Layouts sheet at the beginning of this section). Example: OAF45 4.00, 2" x 2" Example: OAF45 7.25, 4.125" x 3.125"
SKU
OAF45XX

Cabinet Accessories - Front Fillers: OFLFxx, Rear Fillers: OFL xx

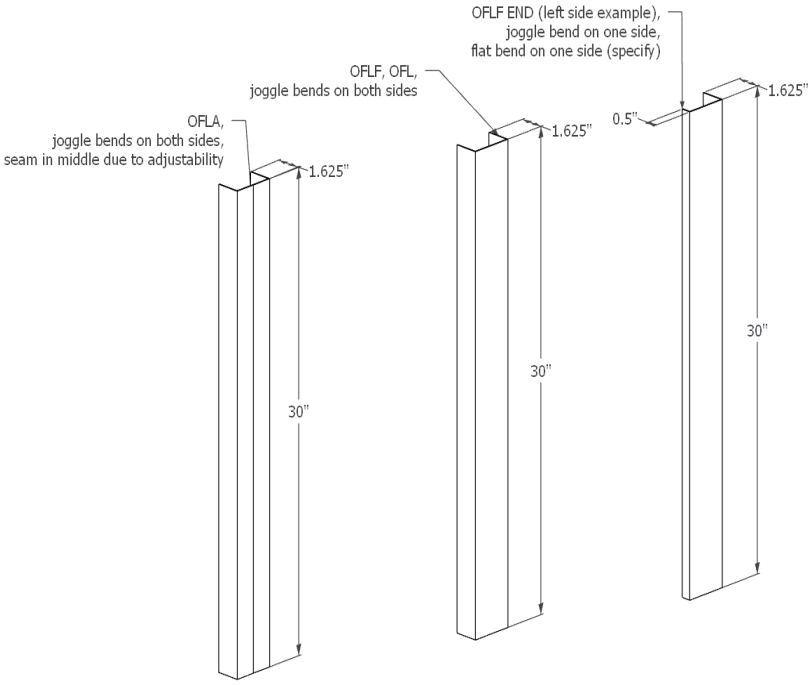

Product Description
OFLF: Front base cabinet filler, sits flush with door/drawer faces, joggle bends on both sides to attach between two base cabinets. 1”W minimum, available in 1/8” increments as needed. Example: OFLF 1.25
SKU
OFLFXX

Product Description
OFL: Rear base cabinet filler, installs flush with cabinet back or back panels if present, attaches between two base cabinets. 1”W minimum, available in 1/8” increments as needed. Example: OFL 1.25
SKU
OFL XX

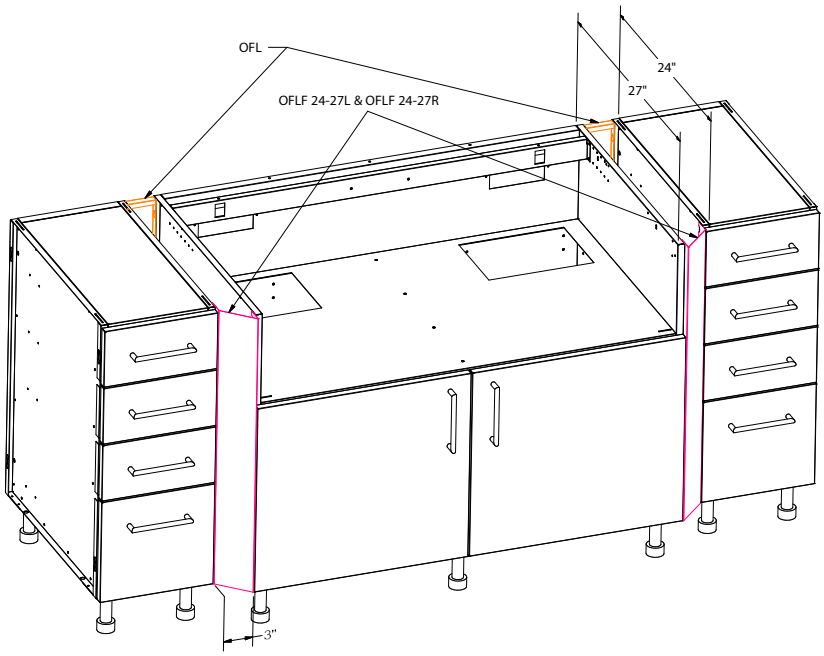

Product Description
OFLF: Front Filler with joggle bends, angled at 45 degrees to connect a 24"D cabinet to a 27"D cabinet or vice versa. Filler width is 4.25"W but it creates a 3"W gap between the cabinets where it connects.
SKU
OFLF 24-27L
OFLF 24-27R

Cabinet Accessories - Front Fillers: OFLF END XX, OFLA x-x

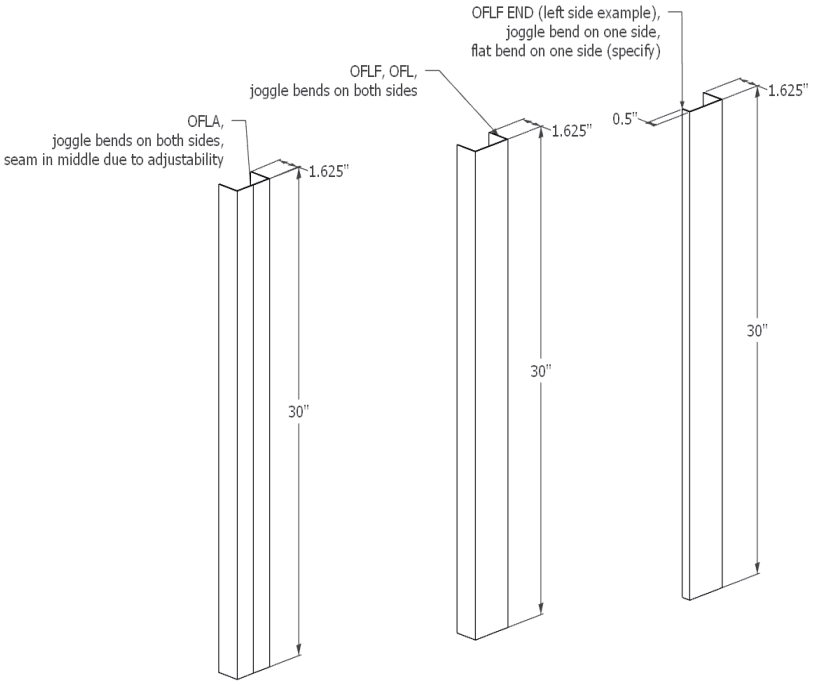

Product Description
OFLF END: Front base cabinet end filler, sits flush with door/drawer faces, attaches between a base cabinet and a wall. 0.5”W minimum, available in 1/8” increments as needed. Joggle bend on one side to attach to cabinet, flat bend on other side for easy installation to wall, specify side. Example: OFLF END 2.00
SKU
OFLF END XX

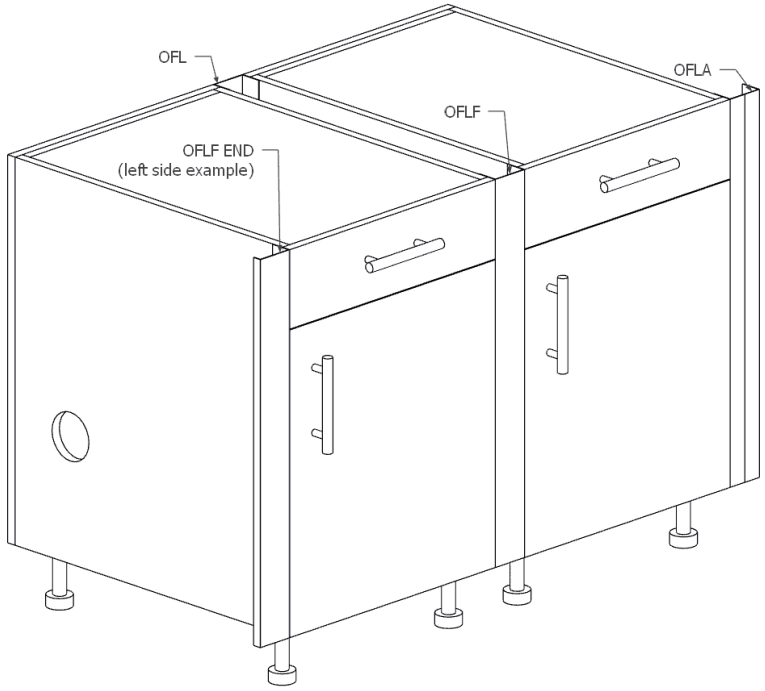

Product Description
OFLA: Adjustable front base cabinet filler, sits flush with door/drawer faces, joggle bends on both sides to attach between two base cabinets.
SKU
OFLA 1.0-1.50
OFLA 1.5-2.38
OFLA 2.0-3.5

Cabinet Accessories - Front/Rear Fillers with GFCI cutout

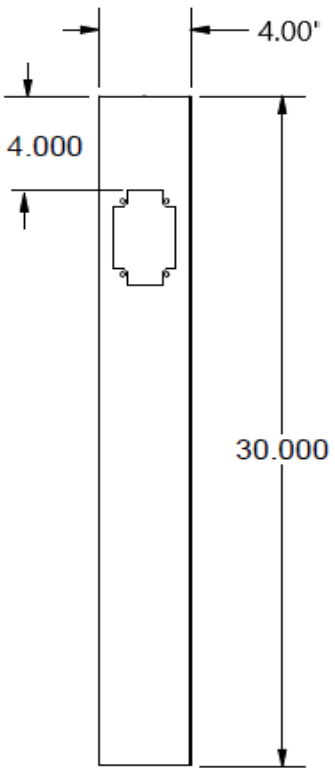

Product Description
OFLF ELEC: Front base cabinet filler, sits flush with door/drawer faces, joggle bends on both sides to attach between two base cabinets. 1”W minimum, available in 1/8” increments as needed. Standard GFCI electrical cutout located 4” down from the top of the filler and centered. *GFCI Outlet Box not provided.
SKU
OFLF 4.00 ELEC

Product Description
OFL ELEC: Rear base cabinet filler, installs flush with cabinet back or back panels if present, attaches between two base cabinets. 1”W minimum, available in 1/8” increments as needed. Standard GFCI electrical cutout located 4” down from the top of the filler and centered.
SKU
OFL 4.00 ELEC

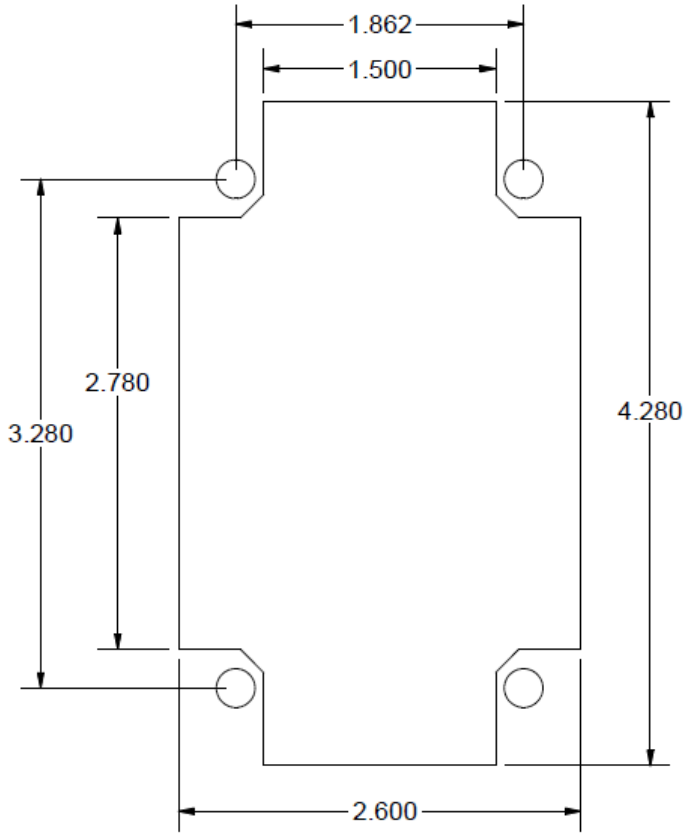

Cabinet Accessories - Undercounter Appliance Filler: OFTS xx xx

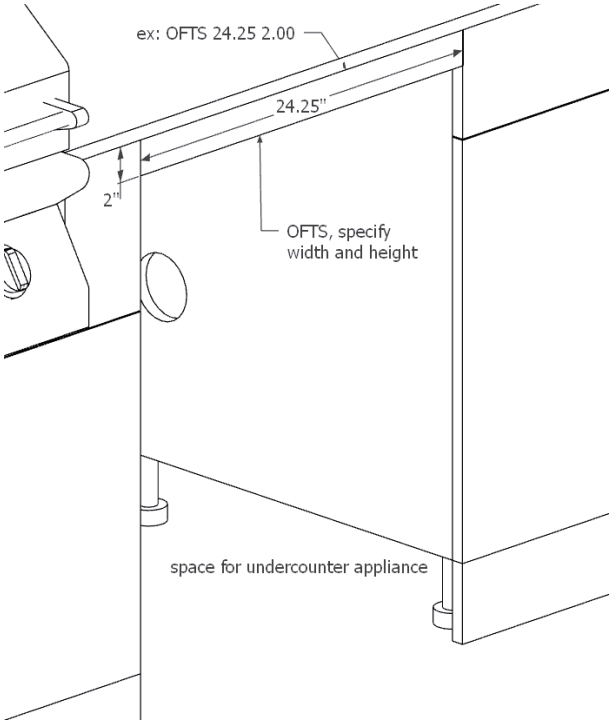

Product Description	
OFTS: Horizontal top spacer to fill gap between undercounter appliance top and countertop. Example SKU: OFTS 24.25 2.00	
SKU	Description
OFTS XX XX	XX" Wide x XX" High

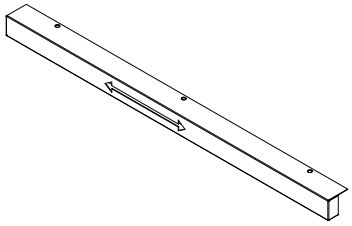

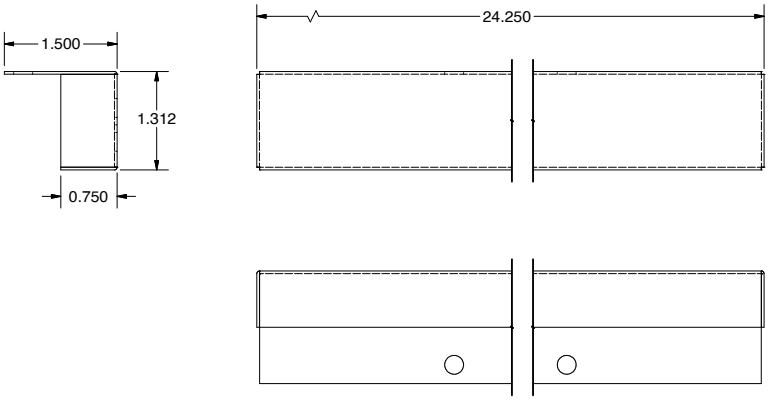

Cabinet Accessories - Access Door Fillers: OFFxx-LH/RH

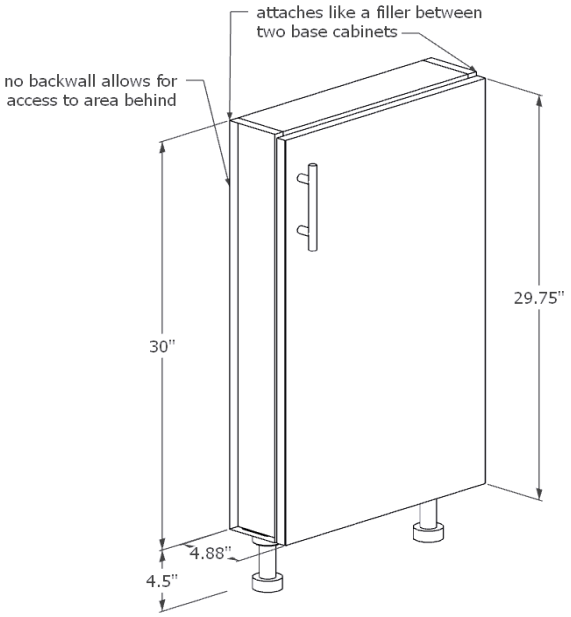

Product Description
OFF: Full-Height door filler cabinet, 4”D with no back wall for easy access to area behind. 1 Door at 24”W and smaller, 2 doors at 33”W and 36”W. Attaches between two base cabinets.
SKU
OFF09-LH
OFF09-RH
OFF12-LH
OFF12-RH
OFF14-LH
OFF14-RH
OFF21-LH
OFF21-RH
OFF24-LH
OFF24-RH
OFF33
OFF36

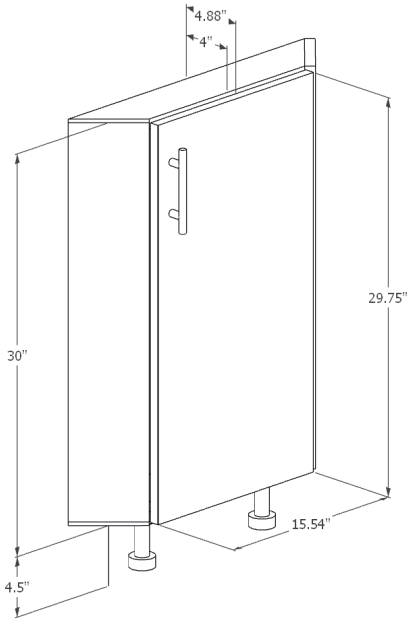

Product Description
OFF CORNER: Full-Height door filler cabinet, 4”D with no back wall for easy access to area behind. Installs in between two cabinets at a corner. 1 Door, specify hinge direction.
SKU
OFF15.5 CORNER

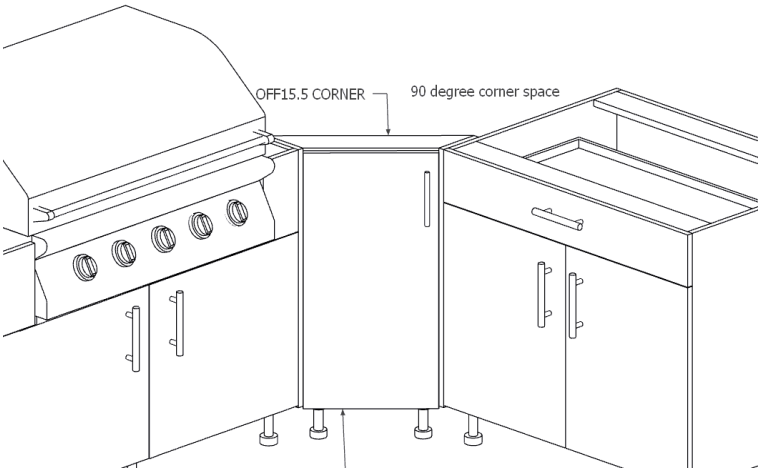

Cabinet Accessories - Countertop Support Piers: OCPSxx

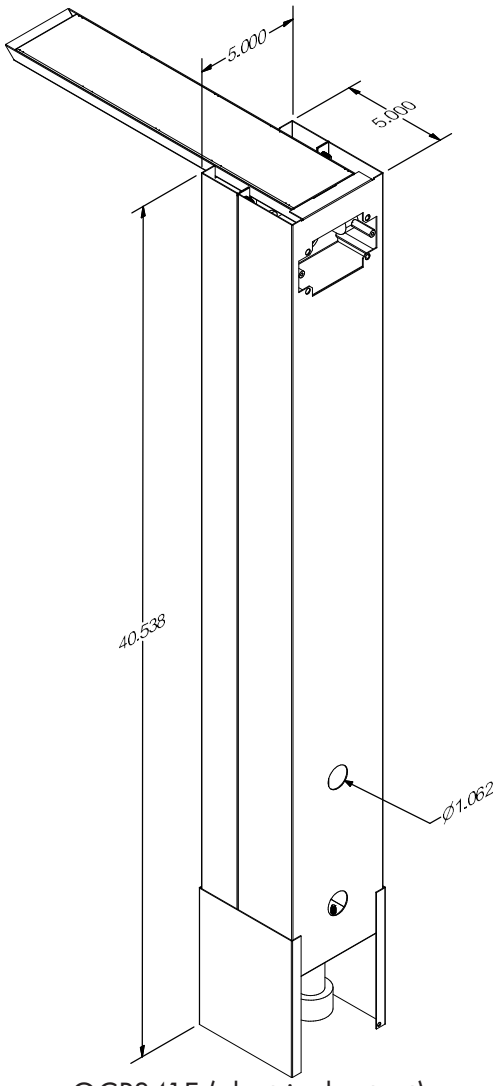

OCPS41E (electrical cutout)

Product Description
OCPS: Raised countertop support piers for creating a bar behind cabinets, 5”W x 5”D, 34.5”, and 41” heights available. Comes with standard height adjustable feet and sliding bracket to cover them. Uses arm to support countertop. Does not require OCP SPAN. *GFCI Outlet Box not provided.
Standard SKU
OCPS34.5
OCPS41
With Electrical Cutout SKU
OCPS41E

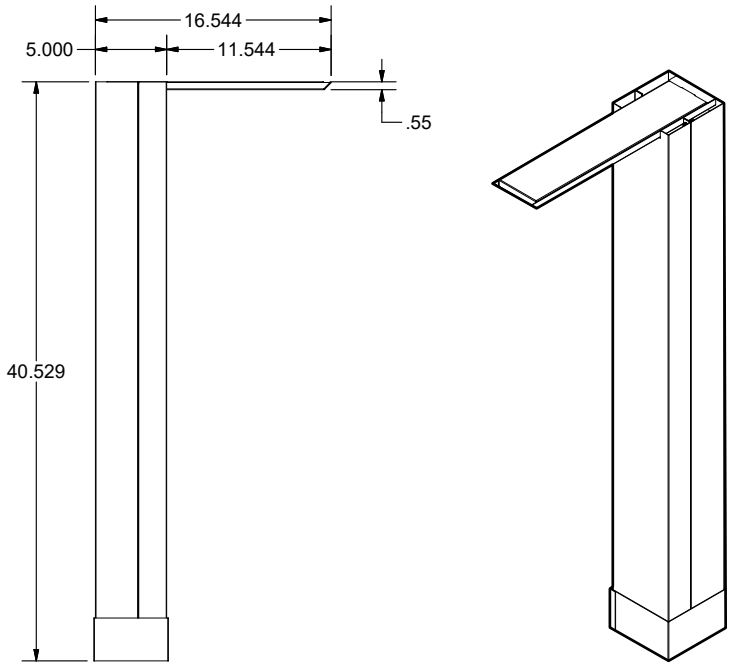

OCPSxx (NO electrical cutout)

Cabinet Accessories - Countertop Span Support: OCS

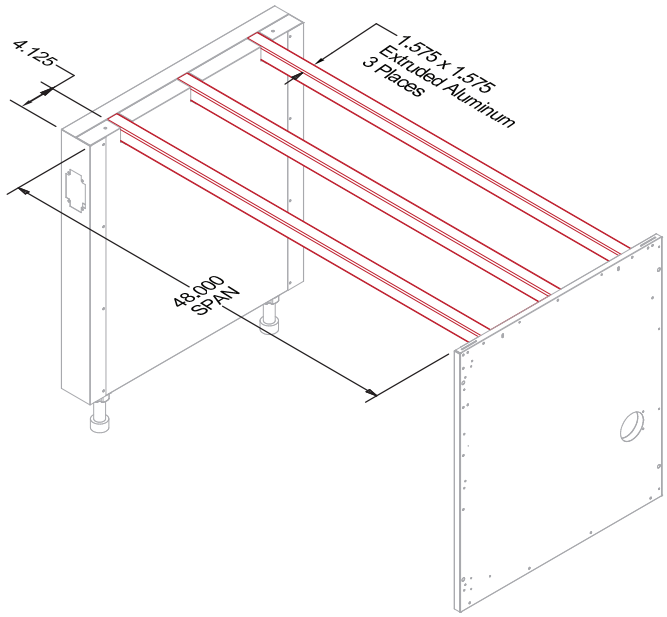

Product Description
OCS: Countertop support spacer. Consists of 3 aluminum extrusions with considerable stiffness. **While the span extrusions are extremely strong, our company does not warrant the spans to keep countertops from cracking, especially if mistreated during use. Your fabricator/installer must make the final call if there are any questions on stability across the span.** When using an OCS with an ORP at the end of a run, be sure to select and ORP OCS part. When using an OCS with a cabine, finish the cabinet side using an OFE OCS part.

SKU
OCS30
OCS33
OCS36
OCS39
OCS42
OCS45
OCS48

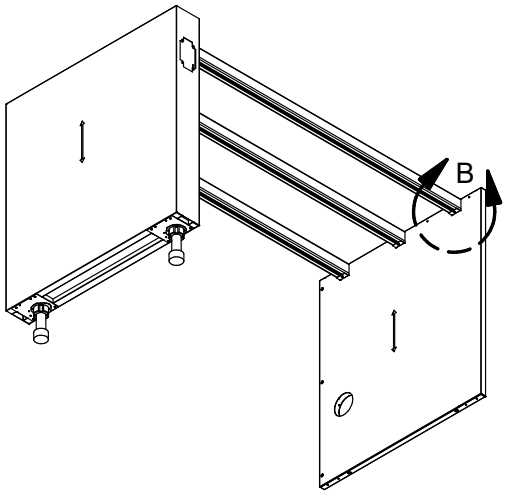

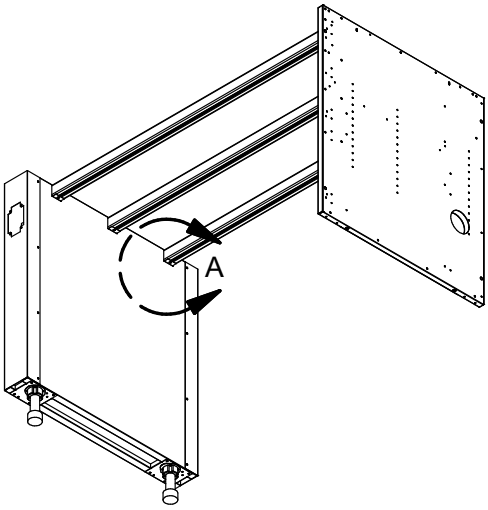

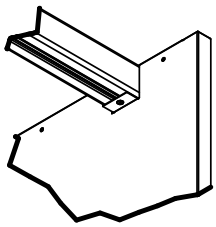

DETAIL B
SHOWING TAB

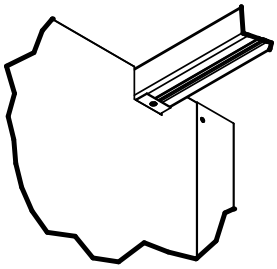

DETAIL A
SHOWING TAB

Cabinet Accessories - Countertop Flush Ends: OFE xxL/R OCS

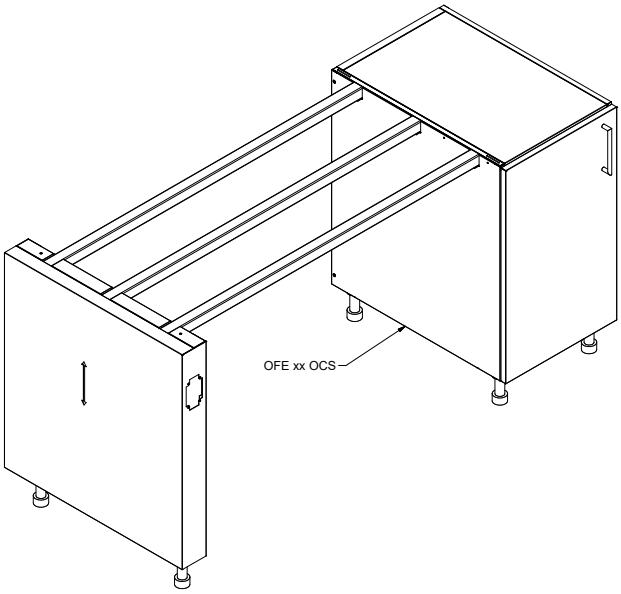

Product Description	
OFE: Base cabinet flush side panel. Sits flush to cabinet side, specify based on cabinet side and depth. *Notched for use with OCS countertop support span*	
27” Depth SKU	24” Depth SKU
OFE 27L OCS	OFE 24L OCS
OFE 27R OCS	OFE 24R OCS

OFE xxL OCS notch detail:

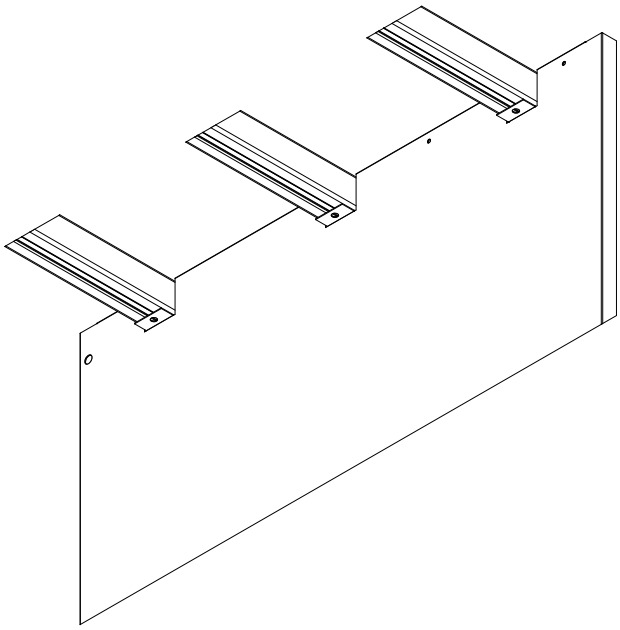

Cabinet Accessories - Side Panels: OSP xxL/R

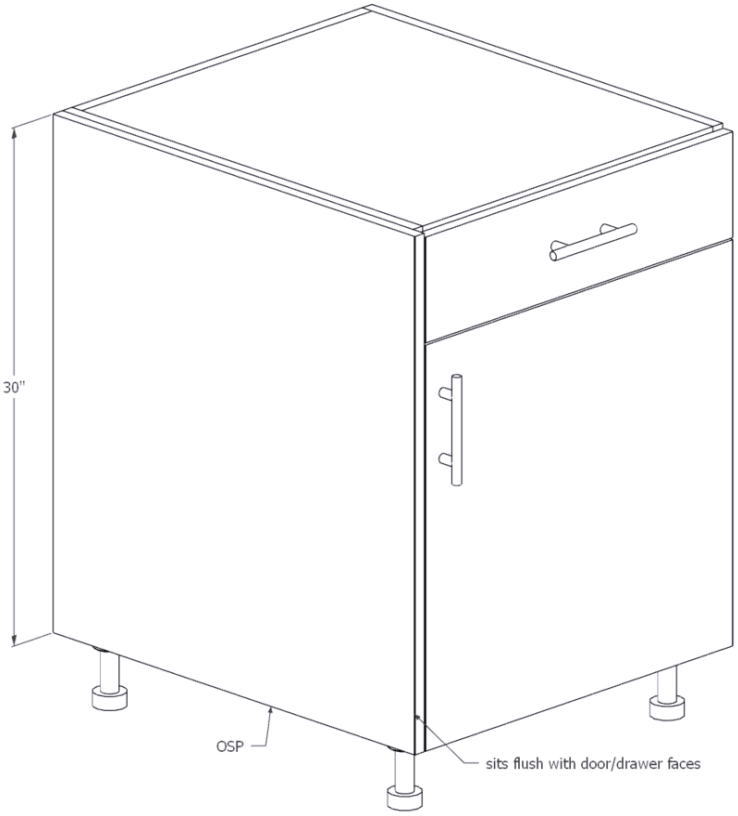

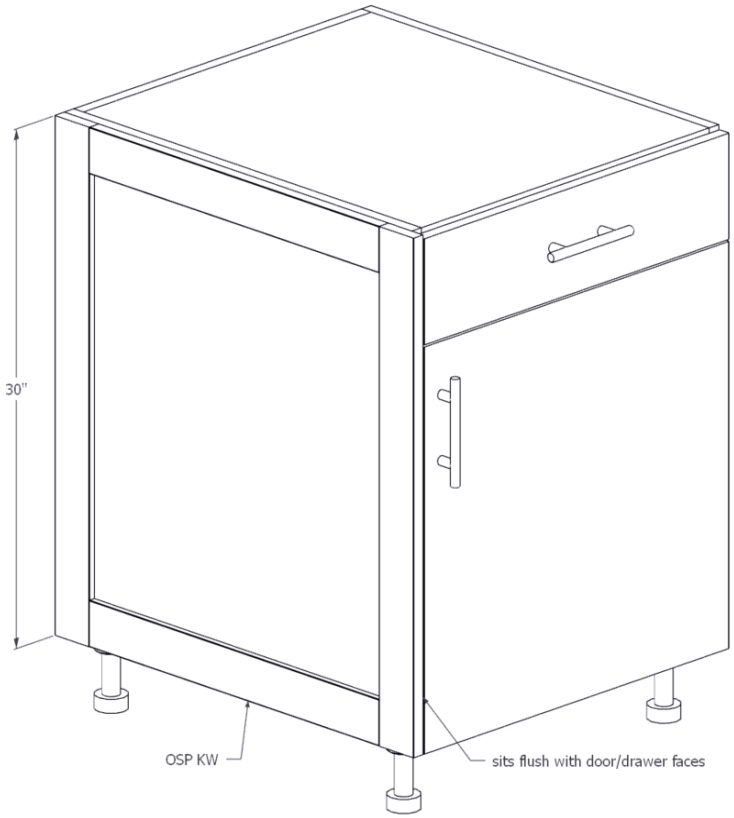

Product Description	
OSP: ¾” Thick side panels for base cabinets. Panels sit flush with door/drawer faces and back panels if used. Specify based on cabinet side and depth (select .75” deeper for use with back panels).	
24” Depth SKU	
OSP 24.88L	
OSP 24.88R	
OSP 25.63L	24”D Cabinet with back panel
OSP 25.63R	24”D Cabinet with back panel
27” Depth SKU	
OSP 27.88L	
OSP 27.88R	
OSP 28.63L	27”D Cabinet with back panel
OSP 28.63R	27”D Cabinet with back panel

OSP panels can be made to match any door style.

SKU Prefix	Door Style
OSP KW	Key West Panel
OSP KW BB	Key West Bead Board Center
OSP KW LV	Key West Louvered Center
OSP KW SG	Key West Seaglass Center (Sky Blue, Seafoam Green, or Cloud White)
OSP PB	Palm Beach Panel
OSP VN	Venice Panel
OSP PB SG	Palm Beach Seaglass Center (Sky Blue, Seafoam Green, or Cloud White)
OSP LD	London Style Panel
OSP NP	Newport Style Panel

Cabinet Accessories - Extended Side Panels: OSP EXTEND

Product Description	
OSP EXTEND: ¾” Thick side panels for base cabinetry, extends past the back of cabinet to cover gaps in back when cabinets are pulled forward from walls. Panels sit flush with door/drawer faces in front. 3” and 4” extended panels standard. Custom sizes also available, use “XX” SKU. Specify based on cabinet size and depth.	
27” Depth SKU	24” Depth SKU
OSP 27.88L EXTEND 3.0	OSP 24.88L EXTEND 3.0
OSP 27.88R EXTEND 4.0	OSP 24.88R EXTEND 4.0
Custom SKU	Note
OSP XXL/R EXTEND XX	XX”=Cabinet depth (24.88" or 27.88") x XX” extended depth needed

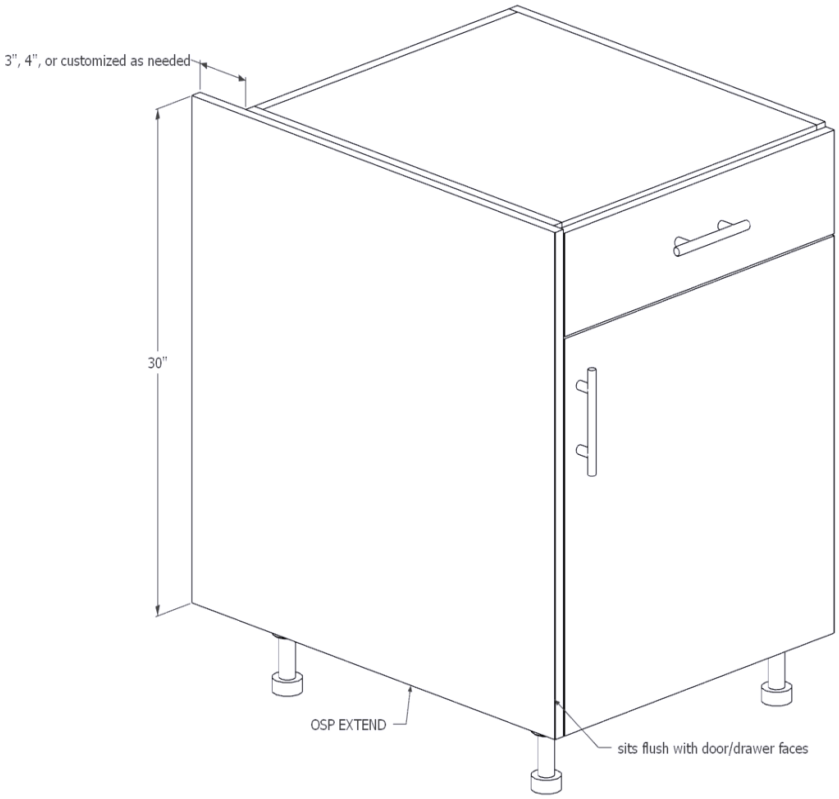

Cabinet Accessories - Flush End Panels: OFE xxL/R, OFEGFxx

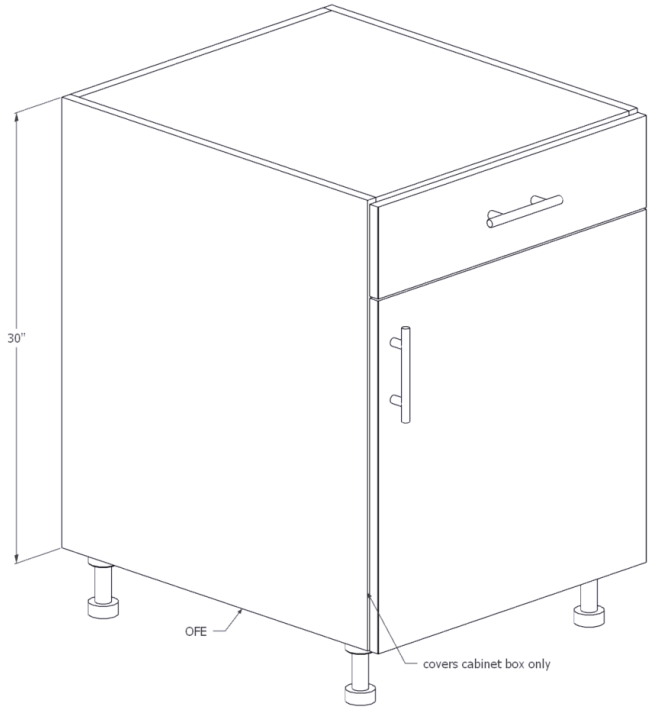

Product Description	
OFE: Base cabinet flush side panel. Sits flush to cabinet side, specify based on cabinet side and depth.	
27” Depth SKU	24” Depth SKU
OFE 27L	OFE 24L
OFE 27R	OFE 24R

Product Description	
OFE APPLIANCE: Base cabinet flush side panel. Sits flush to cabinet side, has round knockout access hole for plumbing/electrical in rear of panel, used to finish a cabinet side adjacent to an undercounter appliance. Specify based on cabinet side and depth.	
27” Depth SKU	24” Depth SKU
OFE 27L APPLIANCE	OFE 24L APPLIANCE
OFE 27R APPLIANCE	OFE 24R APPLIANCE

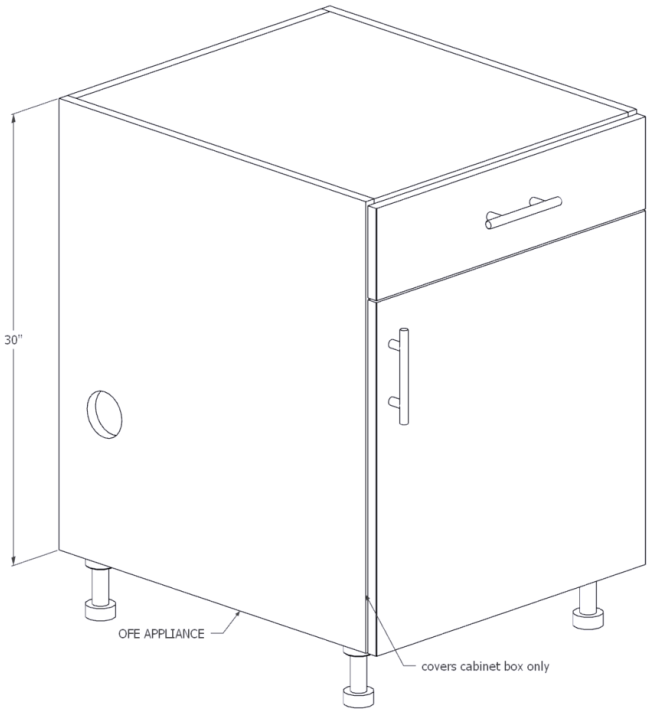

Product Description	
OFEGF: Base cabinet galvanized flush side panel. Sits flush in cabinet side, used to fill in cabinet side for adhering waterfall countertops and other materials. Specify based on cabinet depth.	
27” Depth SKU	24” Depth SKU
OFEGF27	OFEGF24

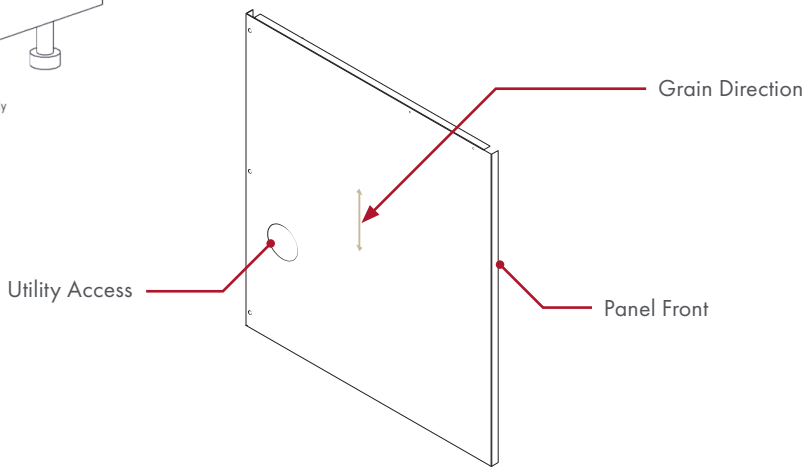

Cabinet Accessories - Back Panels: OBP

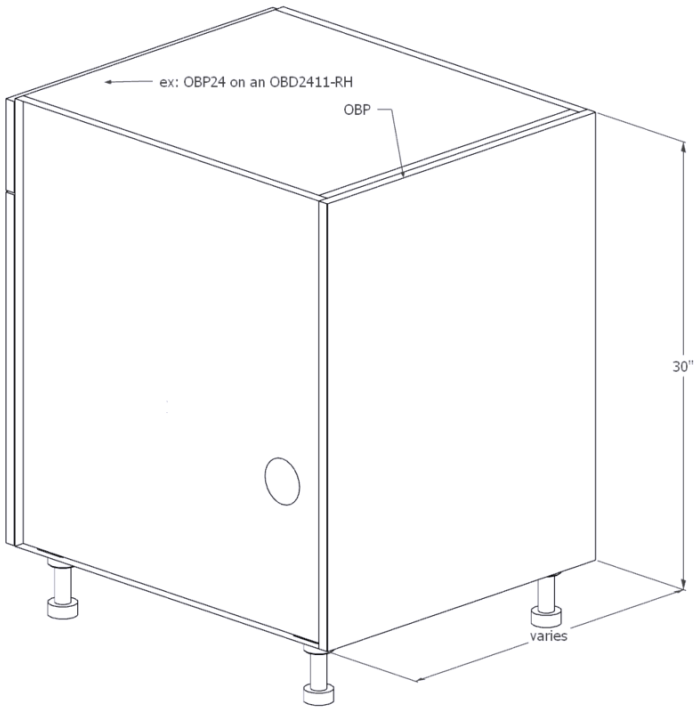

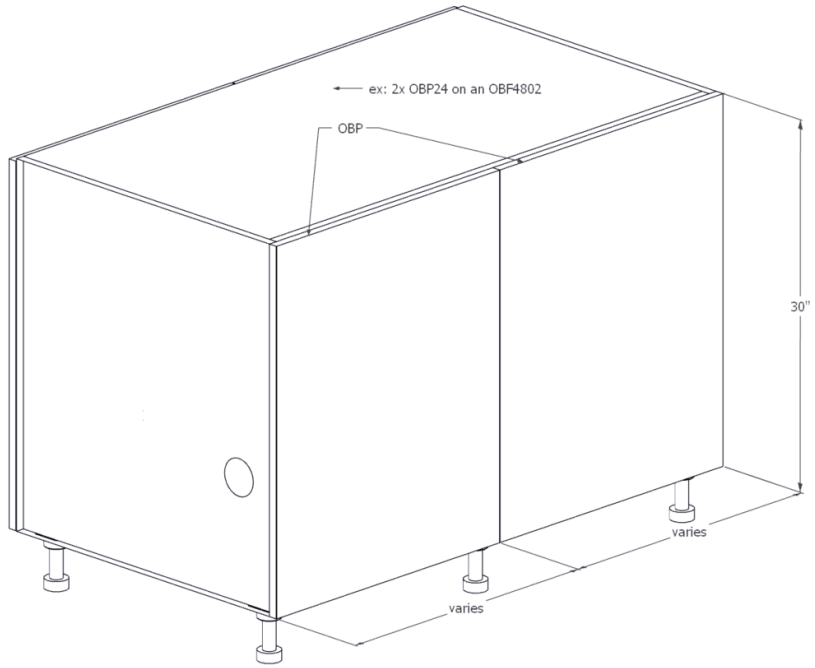

Product Description
OBP: ¾” Thick back panel for base cabinets. Fits exact width of cabinet up to 39”W, wider cabinets use two smaller back panels *(ex. OBF4202 uses two 21”W back panels).* Note: Use standard OBP for ADA SINK SPACE.

SKU	Description
OBP09	9” back panel
OBP12	12” back panel
OBP15	15” back panel
OBP18	18” back panel. Order 1 for an 18” or 2 for a 36” non-appliance cabinet.
OBP19.5	19 1/2” back panel. Order 2 for a 39” non-appliance cabinet.
OBP21	21” back panel. Order 1 for a 21” cabinet or 2 for a 42” cabinet.
OBP22	22” back panel. Order 3 for Galley sink - OBS6603.
OBP22.5	22 1/2” back panel. Order 2 for a 45” non-appliance cabinet.
OBP24	24” back panel. Order 1 for a 24” cabinet or 2 for a 48” cabinet.
OBP26	26” back panel. Order 2 for a 52” non-appliance cabinet.
OBP27	27” back panel
OBP30	30” back panel
OBP33	33” back panel
OBP36	36” back panel
OBP39	39” back panel

Cabinet Accessories - ADA Back Panels

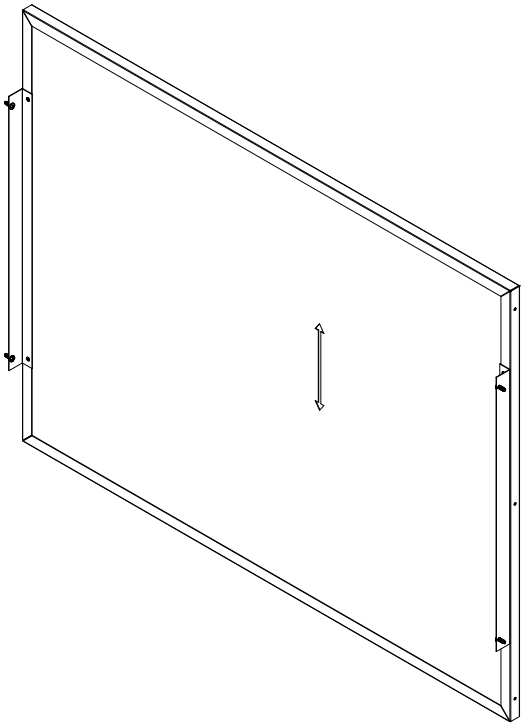

Product Description	
OBP: ¾” Thick back panel for base cabinets. Fits exact width of cabinet up to 39”W, wider cabinets use two smaller back panels *(ex. OBF4202 uses two 21”W back panels).* Note: Use OBPXX ADA SINK SPACE for ADA SINK SPACE applications.	
SKU	**Description**
OBP36 ADA	36” back panel for OBS3600 ADA
OBP39 ADA	39” back panel for OBS3900 ADA
OBP42 ADA	42” back panel for OBS4200 ADA
OBP48 ADA	48” back panel for OBS4800 ADA

Exploded View

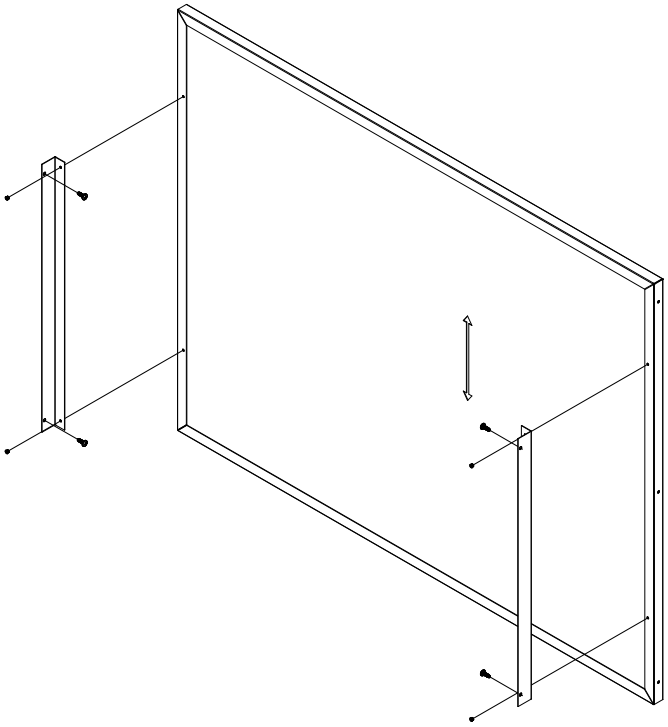

Cabinet Accessories - Vented Back Panels: OBPV

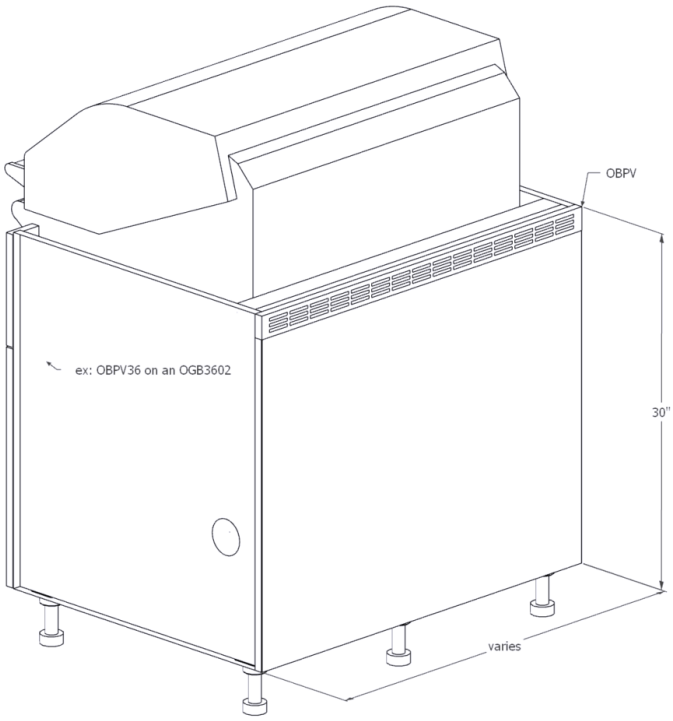

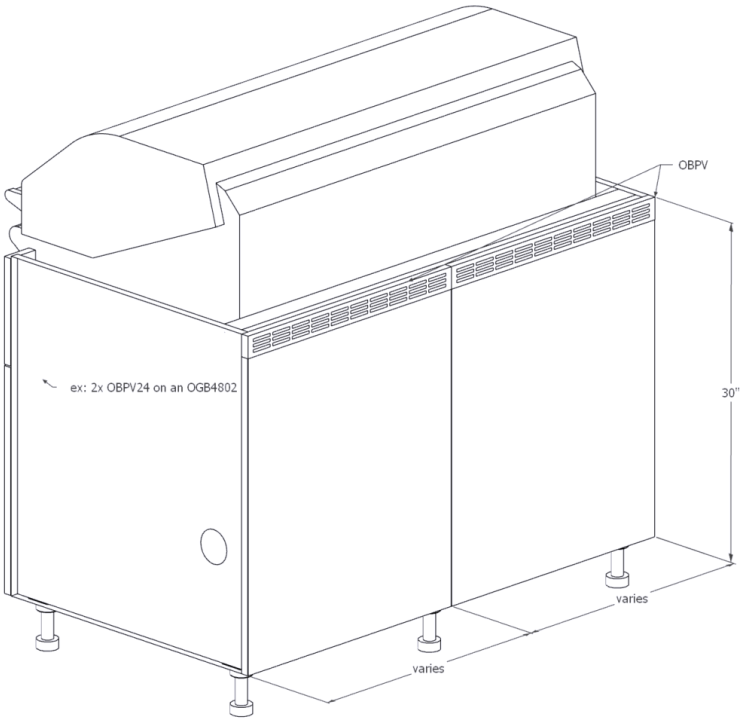

Product Description
OBPV: ¾” Thick vented back panel for base cabinets. Use with cooking appliance cabinets (OGB, OBB, etc.), fits exact width of cabinet up to 36”W, wider cabinets use two smaller back panels *(ex. OGB5841 uses two 29”W back panels).*

SKU	Description
OBPV15	15” vented back panel
OBPV18	18” vented back panel. Order 1 for a side burner or 2 for a 36” grill cabinet.
OBPV21	21” vented back panel. Order 2 for a 42” grill cabinet.
OBPV24	24” vented back panel. Order 2 for a 48” grill cabinet.
OBPV24 OGF	24” vented back panel. Order 2 for a 48” OGF cabinet.
OBPV27	27” vented back panel. Order 2 for a 54” grill cabinet.
OBPV29	29” vented back panel. Order 2 for a 58” grill cabinet.
OBPV30	30” vented back panel
OBPV31	31” vented back panel. Order 2 for a 62” grill cabinet.
OBPV31 OGF	36” vented back panel. Order 2 for 62” OGF cabinet.
OBPV33	33” vented back panel
OBPV36	36” vented back panel
OBPV39	39” vented back panel.

Cabinet Accessories - Galvanized Vented Back Panels: OBPVGF

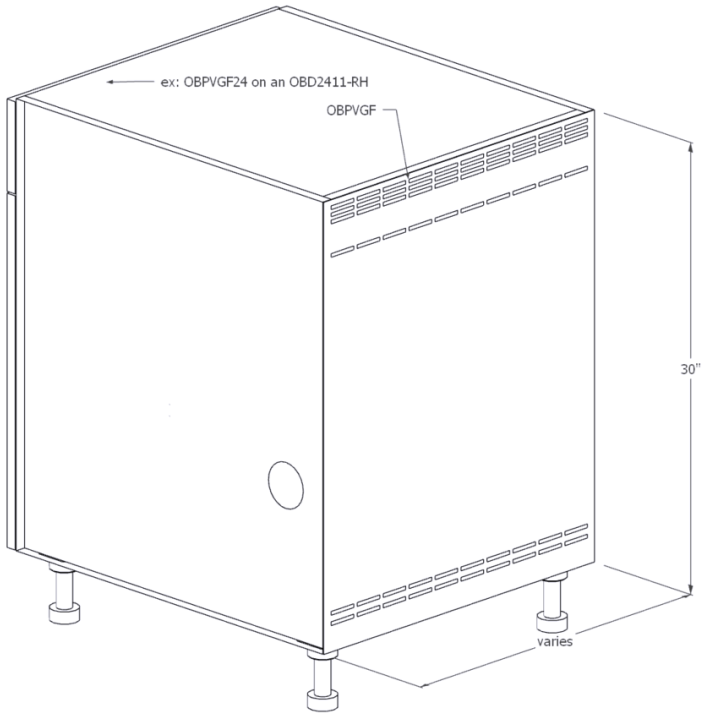

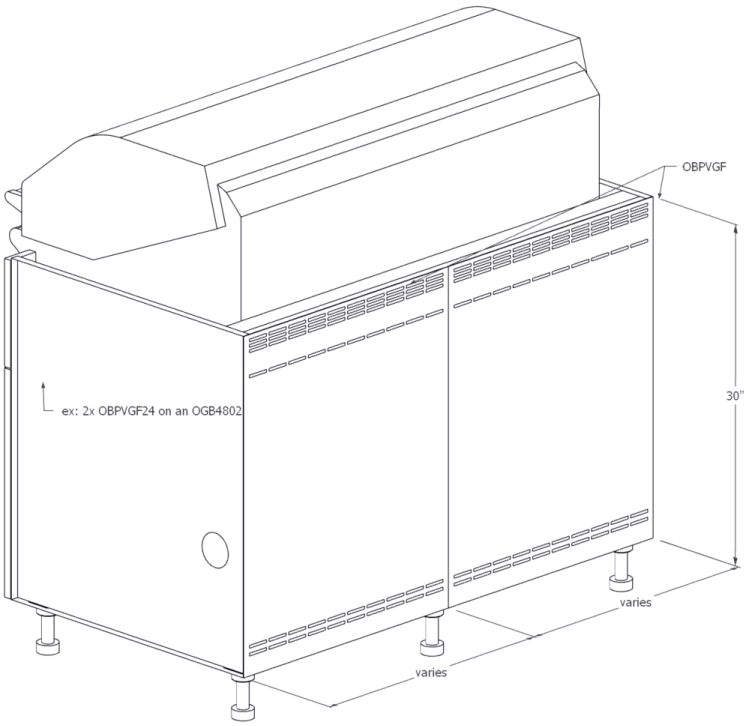

Product Description
OBPVGF: Base cabinet galvanized flush back panel. Sits flush in cabinet back, used to fill in cabinet back for adhering waterfall countertops and other materials. used in conjunction with Equal Back Panels and Extended Back Panels. Fits exact width of cabinet up to 39”W, wider cabinets use two smaller back panels.

SKU	Description
OBPVGF09	Galvanized 9” filler back panel
OBPVGF12	Galvanized 12” filler back panel
OBPVGF15	Galvanized 15” filler back panel
OBPVGF18	Galvanized 18” filler back panel. Order 1 for an 18” side burner or 2 for a 36” grill cabinet.
OBPVGF21	Galvanized 21” filler back panel. Order 1 for an 21” side burner or 2 for a 42” grill cabinet.
OBPVGF22.5	Galvanized 22.5” filler back panel. Order 2 for a 45” cabinet.
OBPVGF24	Galvanized 24” filler back panel. Order 2 for a 48” grill cabinet.
OBPVGF27	Galvanized 27” back panel. Order 2 for a 54” grill cabinet.
OBPVGF29	Galvanized 29” filler back panel. Order 2 for a 58” grill cabinet.
OBPVGF30	Galvanized 30” filler back panel.
OBPVGF31	Galvanzied 31” filler back panel. Order 2 for 62” OGF cabinet.
OBPVGF33	Galvanized 33” filler back panel
OBPVGF36	Galvanized 36” filler back panel
OBPVGF39	Galvanized 39” filler back panel

Cabinet Accessories - Equal Back Panels

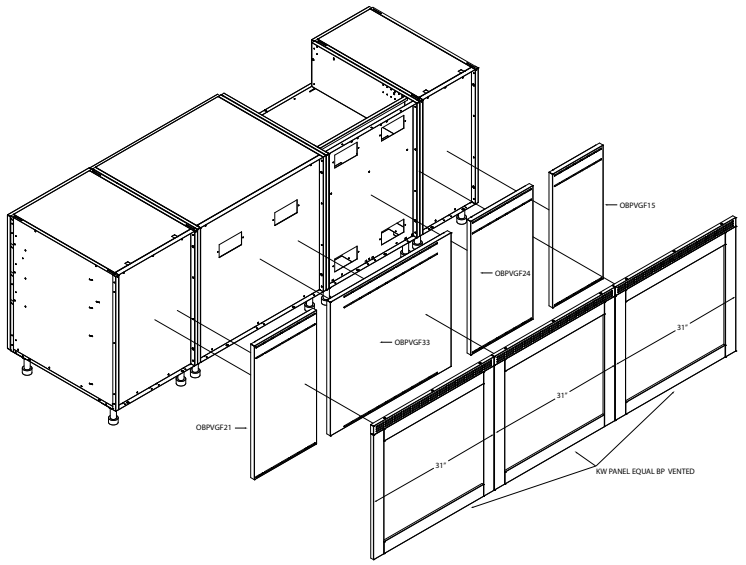

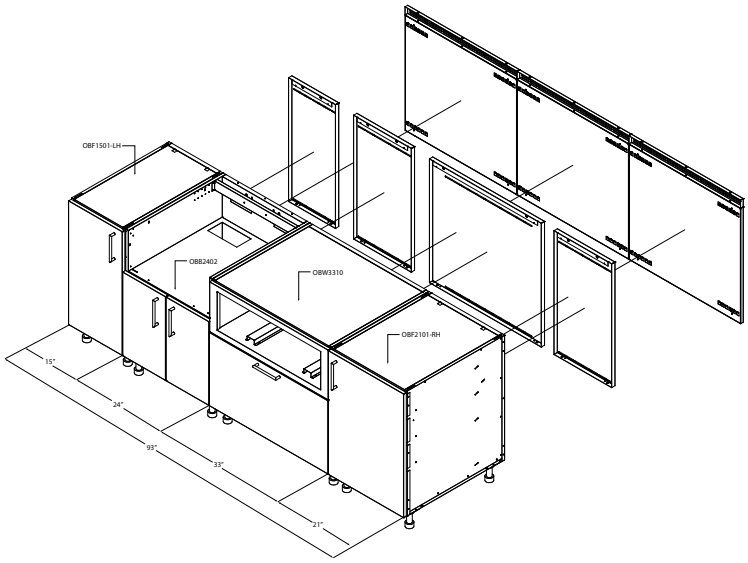

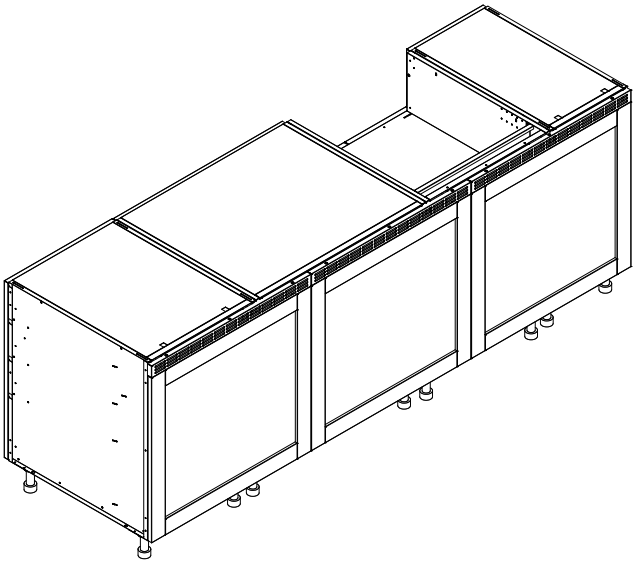

Product Description
Equal Back Panels: ¾” Thick back panels for base cabinets made to match any door style.Widths 24”W – 36”W, custom made to equally span across a run. Must be ordered with OBPVGF galvanized filler back panels on corresponding cabinets for proper installation. Vented or non-vented depending on what cabinets they are being installed on. Notes: When used with OSP finished side panels, choose the depth of the cabinet with back panels (ex: OSP 28.63 for 27.88”D cabinets). When using Equal Back Panels with an OAR corner setup, one side will overhang by .75” to meet up with the equal panels on the other side.

SKU		
Door Style	Non-vented	Vented
Hampton	HM PANEL EQUAL BP	HM PANEL EQUAL BP VENTED
Key West	KW PANEL EQUAL BP	KW PANEL EQUAL BP VENTED
Key West Beadboard Center	KW BB CENTER EQUAL BP	KW BB CENTER EQUAL BP VENTED
Key West Louvered Center	KW LV CENTER EQUAL BP	KW LV CENTER EQUAL BP VENTED
Key West Seaglass Center (Sky Blue, Seafoam Green or Cloud White)	KW SG CENTER EQUAL BP	KW SG CENTER EQUAL BP VENTED
Palm Beach	PB PANEL EQUAL BP	PB PANEL EQUAL BP VENTED
Venice	VN EQUAL BP	VN EQUAL BP VENTED
Palm Beach Seaglass Center (Sky Blue, Seafoam Green or Cloud White)	PB SG CENTER EQUAL BP	PB SG CENTER EQUAL BP VENTED
Palm Beach Textured Center (Bark or Weave)	PB TX CENTER EQUAL BP	PB TX CENTER EQUAL BP VENTED
Trex LONDON	LD EQUAL BP	LD EQUAL BP VENTED
Trex NEWPORT	NP EQUAL BP	NP EQUAL BP VENTED

Cabinet Accessories - Extended Equal Back Panels

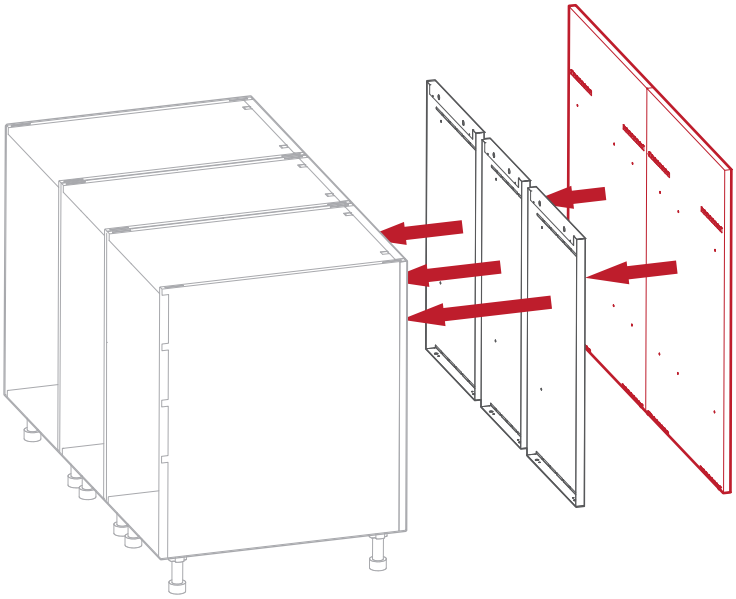

Product Description
HM PANEL EQUAL BP EXTEND VENTS or NO VENTS: 3/4" thick back panels for base cabinets that extend 6" above cabinet tops. Height does not scale with countertop height, panels end 6" above the cabinet tops without any countertop. Widths 24"W - 36"W, custom made to span equally across a run. Must be ordered with OBPVGF galvanized filler back panels on corresponding cabinets to install. Vented or non-vented depending on cabinets installed on. Notes: When used with OSP finished side panels, choose the depth of the cabinet without back panels. (Ex: OSP 27.88L or R for 27.88"D cabinets). When using Extended Back Panels with an OAR corner setup, one side will overhang by .75" to meet with equal panels on other side

SKU	Description
HM PANEL EQUAL BP EXTEND NO VENTS	Finished equal back panels that extend 6" above cabinet tops.
HM PANEL EQUAL BP EXTEND VENTS	Finished vented equal back panels that extend 6" above cabinet tops.

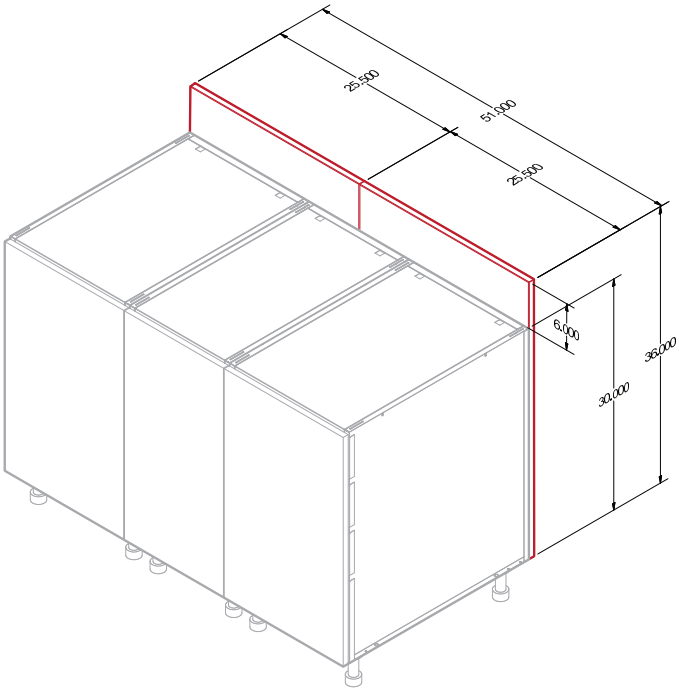

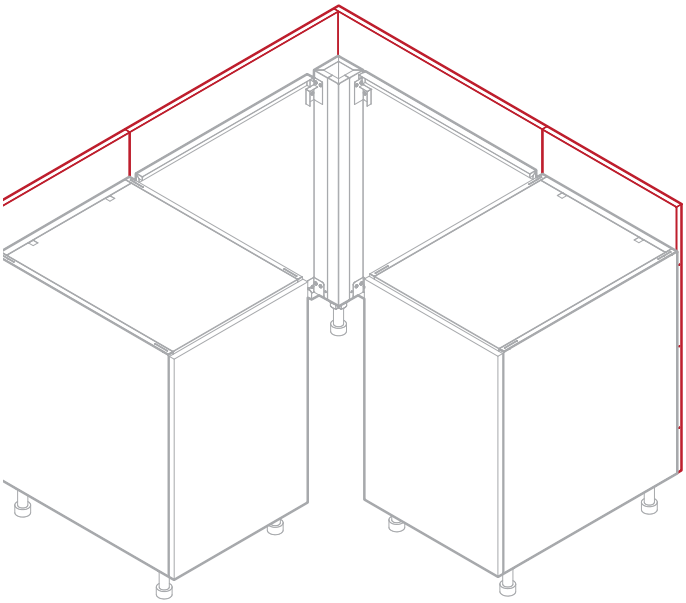

Wood grain direction: Hampton Door style

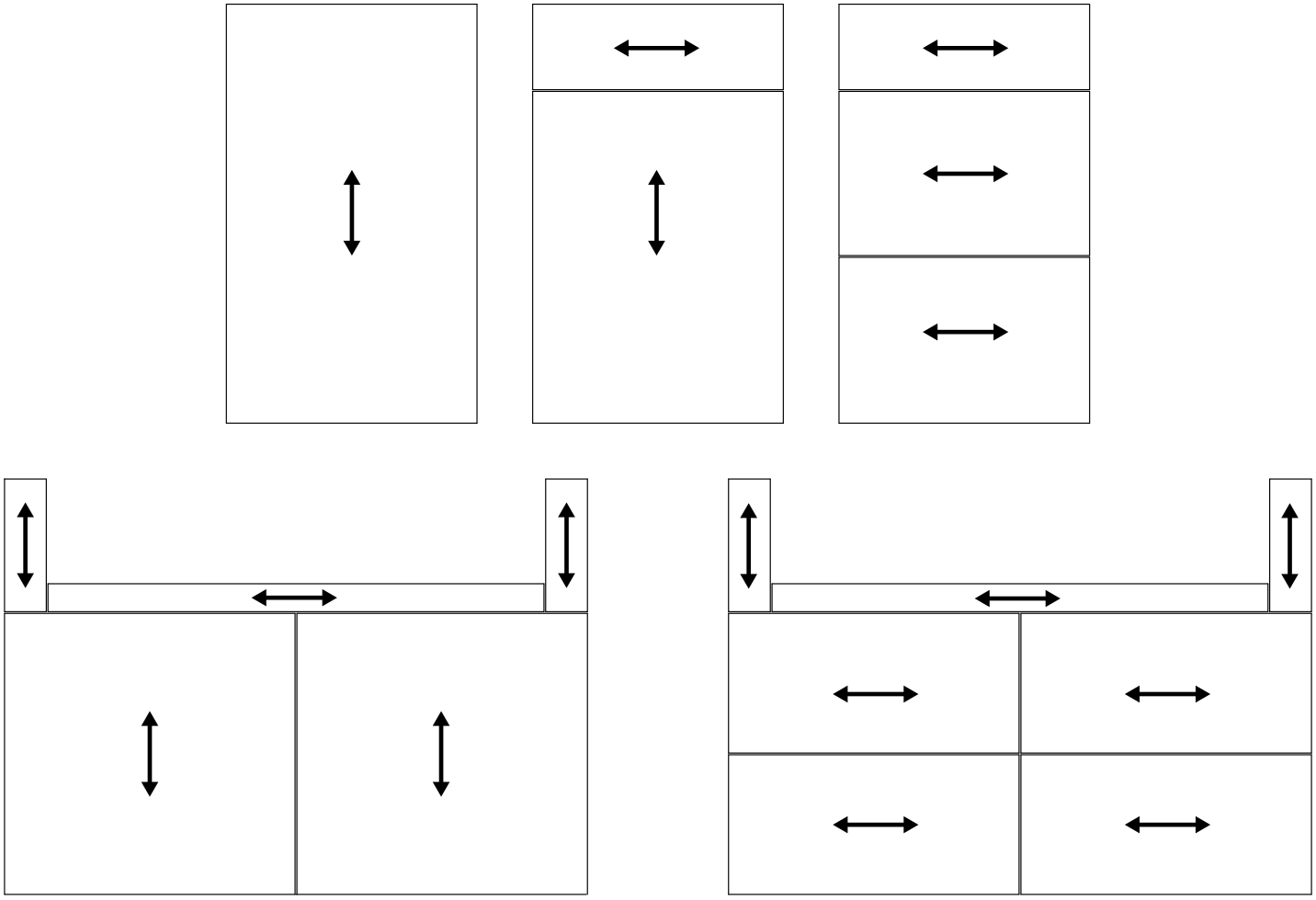

Optional: Horizontal or Vertical grain direction on all faces. Please list grain direction on quotation notes prior to placing order. Email sales@danver.com for additional information.

Wood grain direction: Key West Door Style

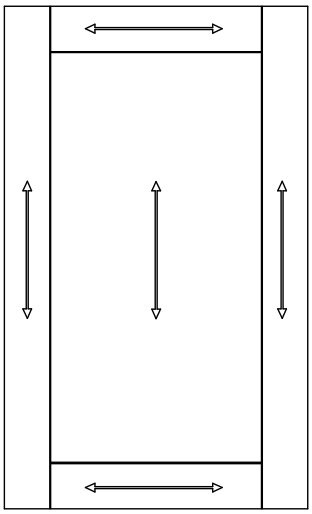

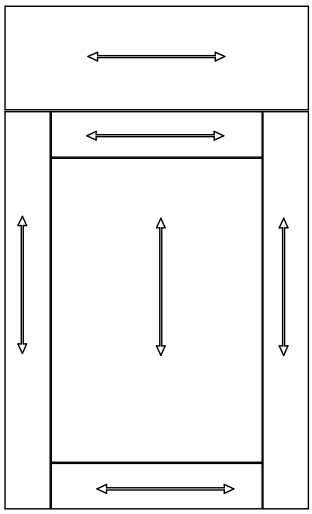

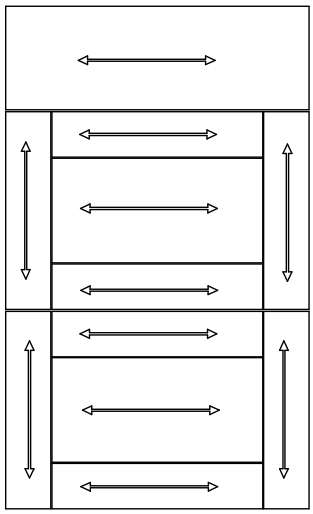

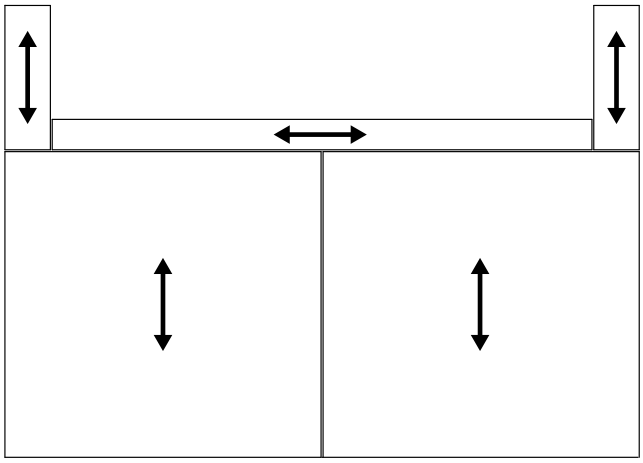

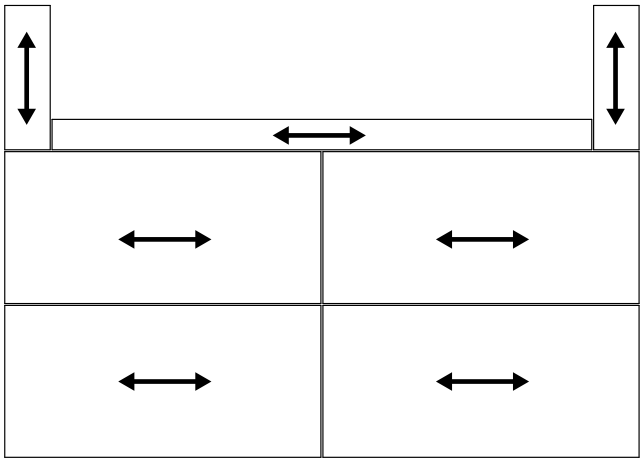

Optional: Horizontal or Vertical grain direction on all faces. Please list grain direction on quotation notes prior to placing order. Email sales@danver.com for additional information.

Miscellaneous - Standard Handle Placement

Wall Cabinet handle placement

Vertical wall cabinet handle placement is the same as base cabinets but at the bottom of each door.

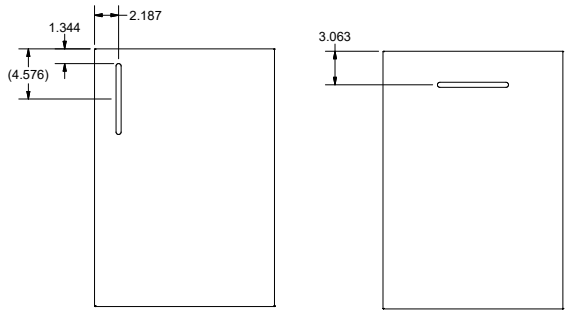

Hampton (slab) handle placement

Note: Vertical knob hole placement is is 1.56" from door top, 2.19" from side. Horizontal knob placement is centered on the door in the same location as pulls from the top.

Drawer handle placement is centered from top to bottom and side to side on the drawer front. Standard handle placement from top on center applies to full height drawers only.

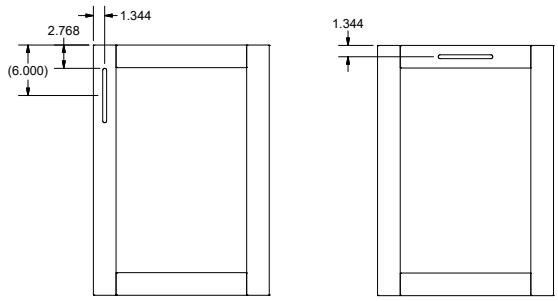

Key West handle placement

Note: Louver, Beadboard, Palm Beach, London, Newport, and Rio style doors have the same handle placement as Key West.

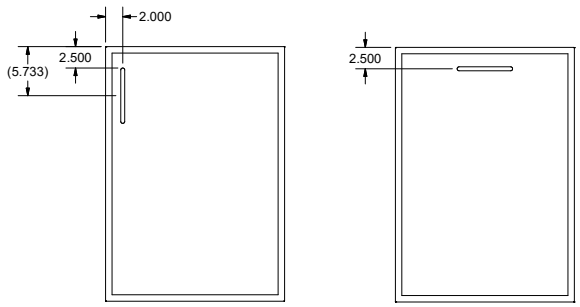

Venice handle placement

Miscellaneous - Handles

Standard Handle

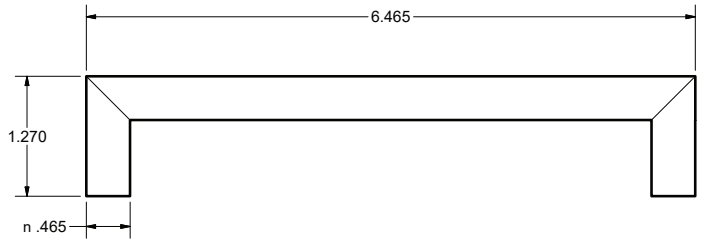

NOTE: Standard 6" center to center handle (replaced 128mm T-Bar handle on all doors and drawers on 6/14/2021).

Product Description
All Danver, Brown Jordan, and Trex Outdoor Kitchens cabinets come drilled and assembled with our standard stainless steel handle unless otherwise noted on the order. NOTE: Pulls can be powder coated any finish except wood grain and Dekton finishes using the PC HANDLES part.

Overlay Panel Handle

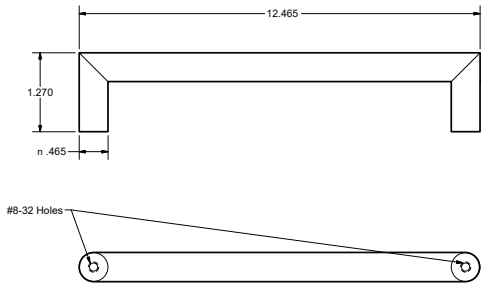

NOTE: For use on appliance overlay panels only

Product Description
All Danver, Brown Jordan, and Trex Outdoor Kitchens overlay panels come drilled for our standard stainless steel overlay handle unless otherwise noted on the order. NOTE: Handles can be powder coated any finish except wood grain and Dekton finishes using the PC HANDLES part.

Miscellaneous - Pull Tab Handles

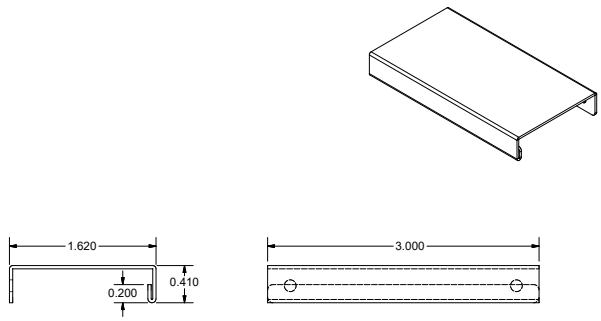

Product Description
PULL TAB: Stainless steel tab pull, can be powder coated. Top Center install on drawers. Top Edge install on doors.
Notes
Door pulls: 3“ wide, 1 5/8”deep, 3/8” tab
Drawer pulls: 6“ wide, 1 5/8”deep, 3/8” tab

Pull tab placement on slab door.

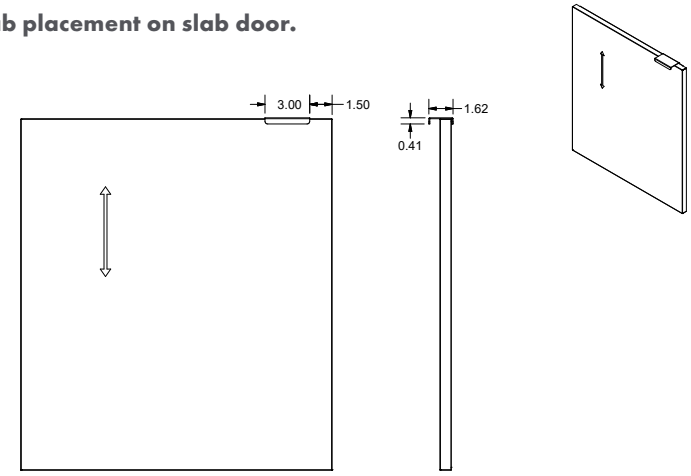

Pull tab placement on slab drawer.

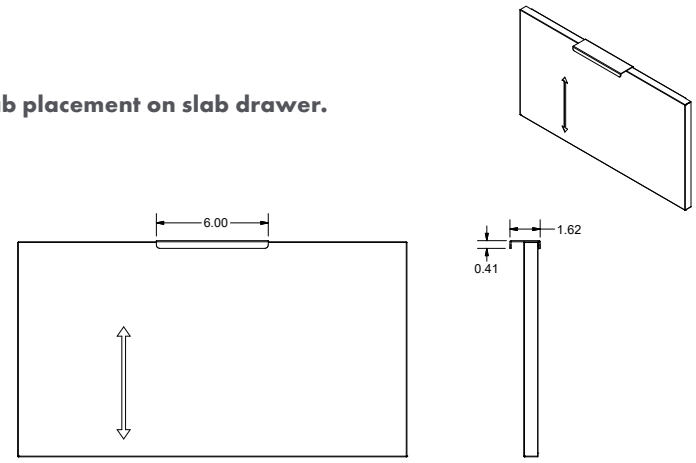

Miscellaneous - Appliance Overlay Panels, Locks

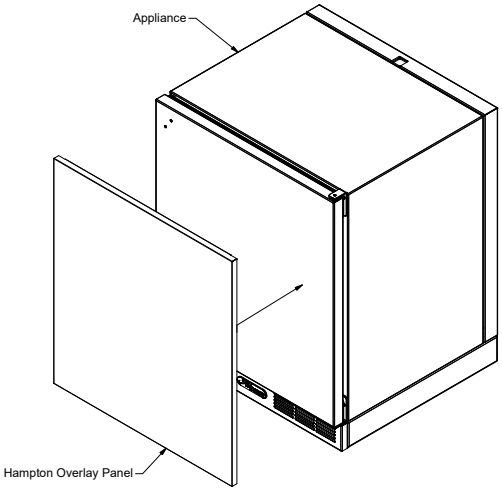

HAMPTON OVERLAY PANEL

Product Description
Panels made to match any door/drawer style for most outdoor rated panel ready appliances such as refrigerators, ice makers, beverage centers, etc. Glass door frames in the Key West or Rio style are also possible. Please submit manufacturer specifications for panel(s) when requesting a kitchen quote. Example SKU: True 15 HM-LH. This panel is used for a True 15" refrigerator, Hampton (slab) door style, left-hinged.

SAMPLE SKUs

Manufacturer	Width	Door Style	Hinge
TRUE	24	KW	-LH
PERLICK	15	VN	-RH
SUMMIT	24	HM	-LH
SUB-ZERO	24	KW SG	-RH

Product Description
LOCK: Add keyed lock to Hampton, Key West, Palm Beach, or Pull Tab doors. Can be applied to Key West doors but not drawers.

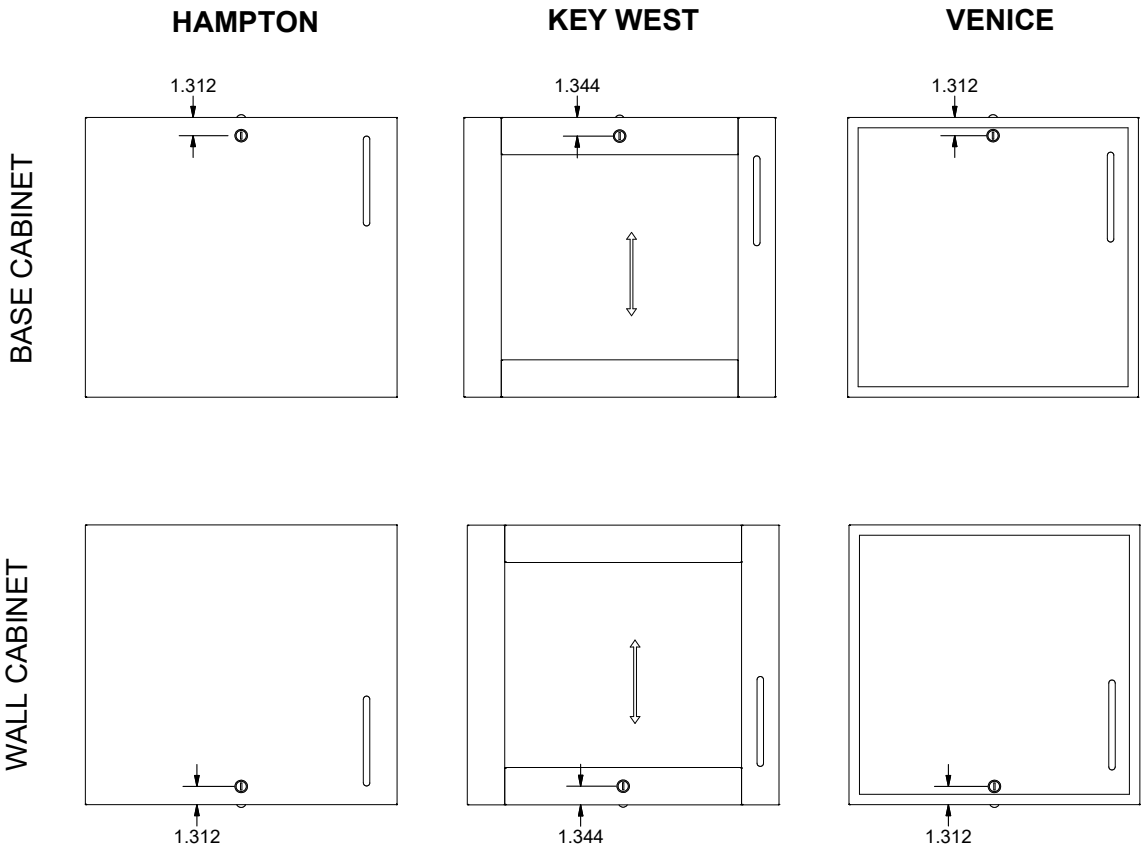

Miscellaneous - Sink Covers: SCxxxx

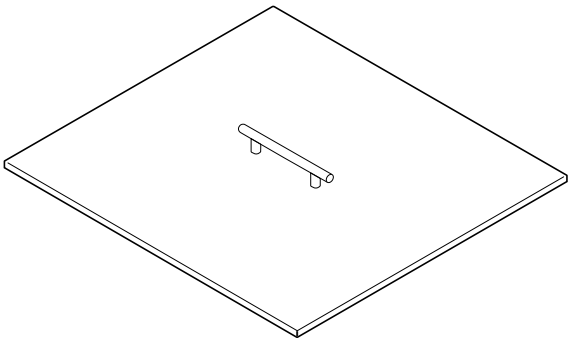

Product Description
SC: Stainless 304 sink covers with handles to match cabinets. Can be powder coated to match cabinets. Custom sizes available, please contact sales. *Size listed is inside dimension* Ex: 21"W x 16"H

SKU
SC2116
SC2121
SC2422
SC3222
SC3422
SC3822
SC4322

Miscellaneous - Standard Legs

Typical cabinet leg location.

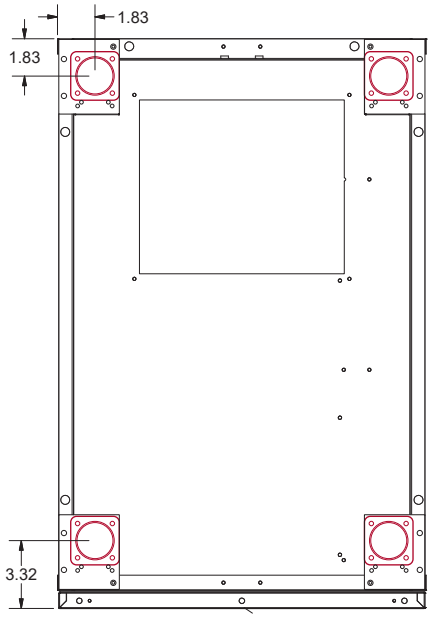

Bottom View

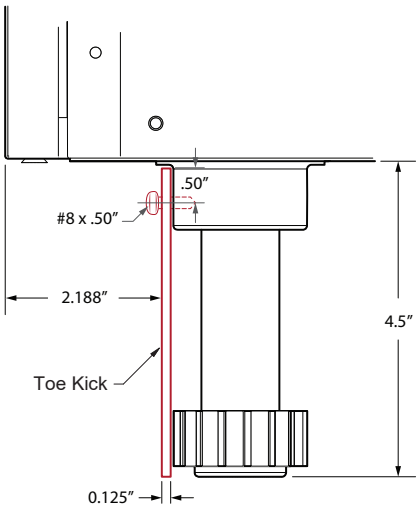

Side View

Our standard cabinetry leg is adjustable from 3.75" to 5.75".

Standard legs that have been cut to ADA height are adjustable from 2" to 2.75".

Modification of Standard Legs

Standard legs can be modified if the cabinet needs to sit below our standard minimum leg height (i.e. ADA application). This modification will allow the legs to be at a reduced height but still afford the ability for adjustment, ensuring correct leveling of cabinets.

Refer to the Cabinet Installation Instructions for complete information.

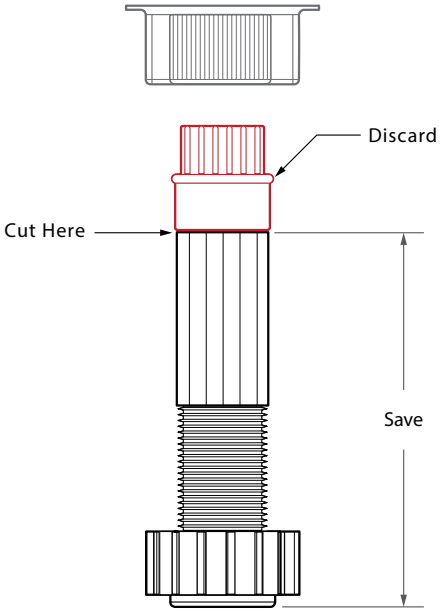

Miscellaneous - Stainless Legs: SSLEGS, Wall Leg Kit

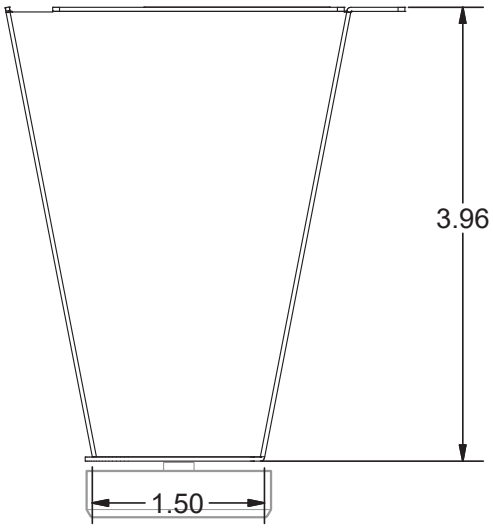

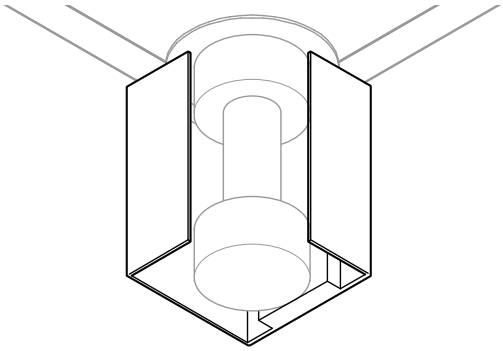

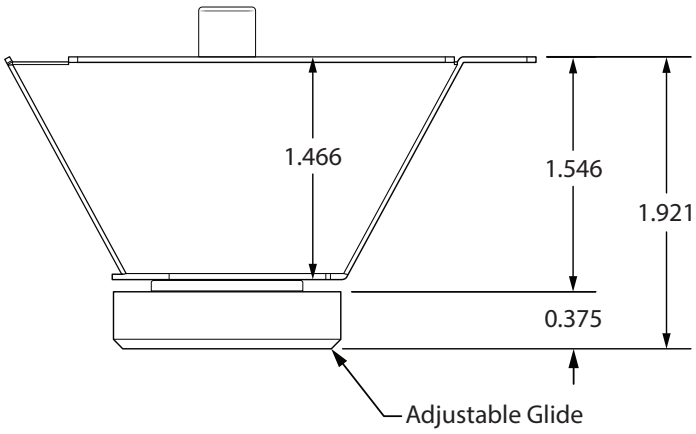

Product Description	
SSLEG options: A wide range of Stainless Steel leg covers are available. ADA compliant leg and wall cabinet leg modifier kits are also available. Stainless legs can be powder coated to match cabinetry.	
SKU	Descriptoin
SSLEG	Exposed 4.5'' high stainless steel tapered leg. Number required based on cabinet sizes, either 4, 6, or 8 (54'' and above). REPLACES LEGS. NOTE: Cannot be used for ORP/OBX units smaller than 3.88''W
SSLEG COVER	Square stainless cover for standard legs where no toe kick preferred. NOTE:Cannot be used for ORP/OBX units smaller than 3.88''W
SSLEG COVER ADJ	Adjustable square stainless steel leg cover: 3'' minimum - 5.62'' maximum height. NOTE: Cannot be used for ORP/OBX units smaller than 3.88''W
SSLEG COVER DOUBLE	Square stainless cover to cover 2 standard legs
ADA SSLEG	Exposed 2'' high stainless steel tapered leg for ADA compliant cabinet. Number required based on cabinet sizes, either 4, 6, or 8 (54'' and above). REPLACES STANDARD LEGS. NOTE: Cannot be used for ORP or OBX units smaller than 3.88''W
WALL LEG KIT	Set of 4 legs and receivers to allow wall cabinet to act as base.
WALL LEG KIT ADA	Set of 4 stainless steel ADA height legs to allow wall cabinet to act as base.

Miscellaneous - Toe Kick: OTK

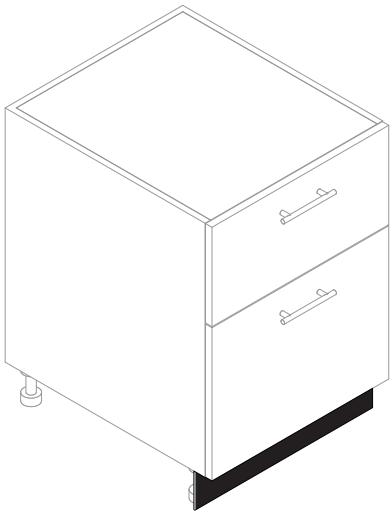

Black Toe Kick

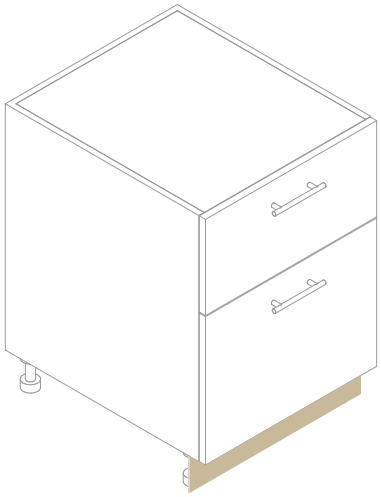

Stainless Steel Toe Kick

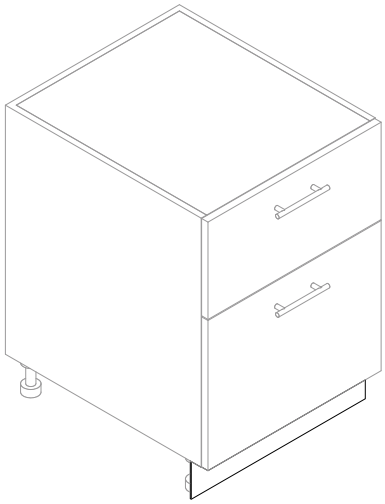

Powder Coated Aluminum Toe Kick

Product Description				
Toe Kick: .090” thick Aluminum toe kick is available plain to match stainless or can be powder coated to match cabinetry. NOTE: SHIPPED SEPARATELY VIA FEDEX/UPS GROUND, NOT WITH FREIGHT SHIPMENT!				
Finish	84” Length of Toe Kick	Splice for Connecting Straight Run	45 degree Corner Splace	90 Degree Corner Splice
2” H Black Finish	OTK2	OTK2 SPLICE	OTK2 CORNER 45	OTK2 CORNER 90
2" H Aluminum Finish	OTK2-AL	OTK2-AL SPLICE	OTK2-AL CORNER 45	OTK2-AL CORNER 90
2” H Powder Coated Finish	OTK2-AL PAINTED	OTK2-AL SPLICE PAINTED	OTK2-AL CORNER 45 PAINTED	OTK2-AL CORNER 90 PAINTED
4.38” H Black Finish	OTK4	OTK4 SPLICE	OTK4 CORNER 45	OTK4 CORNER 90
4.38” H Powder Coated Finish	OTK4-AL PAINTED	OTK4-AL SPLICE PAINTED	OTK4-AL CORNER 45 PAINTED	OTK4-AL CORNER 90 PAINTED
6” H Black Finish	OTK6	OTK6 SPLICE	OTK6 CORNER 45	OTK6 CORNER 90
6” H Aluminum Finish	OTK6-AL	OTK6-AL SPLICE	OTK6-AL CORNER 45	OTK6-AL CORNER 90
6” H Powder Coated Finish	OTK6-AL PAINTED	OTK6-AL SPLICE PAINTED	OTK6-AL CORNER 45 PAINTED	OTK6-AL CORNER 90 PAINTED

Miscellaneous - Floating Shelves

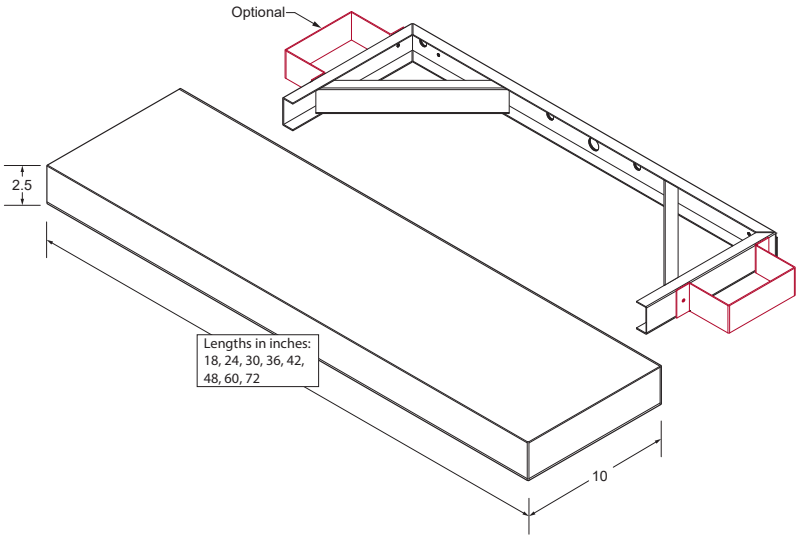

Product Description
Floating Shelf: xx"W x 2.5"H x 10"D
SKU
FS18B
FS24B
FS30B
FS36B
FS42B
FS48B
FS60B
FS72B

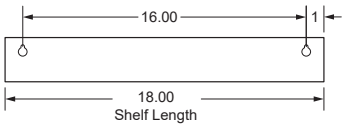

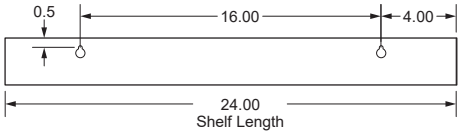

Note: Floating shelf bracket mounting hole locations shown in diagrams.

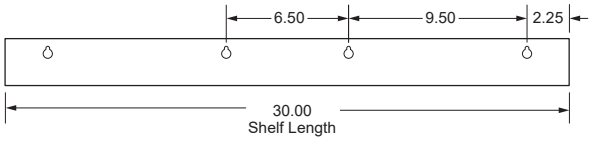

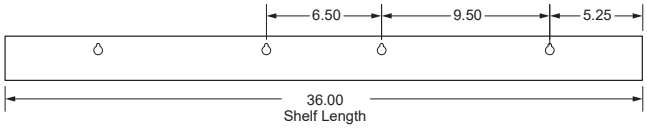

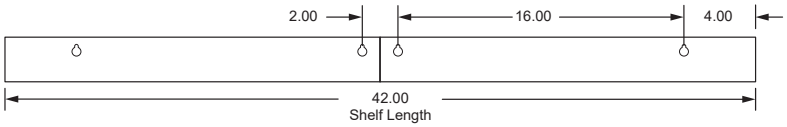

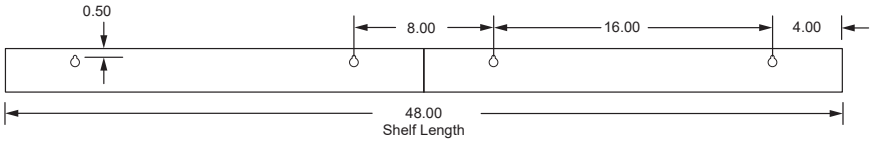

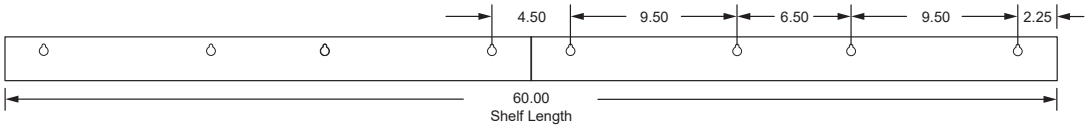

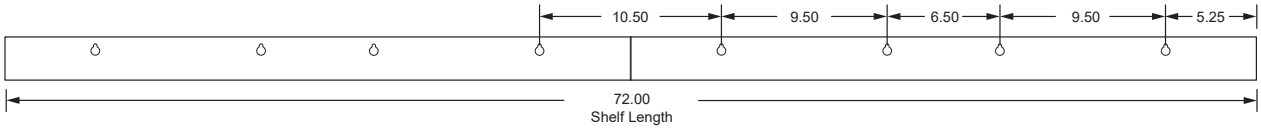

Miscellaneous - Floating Shelves: Puck Lights

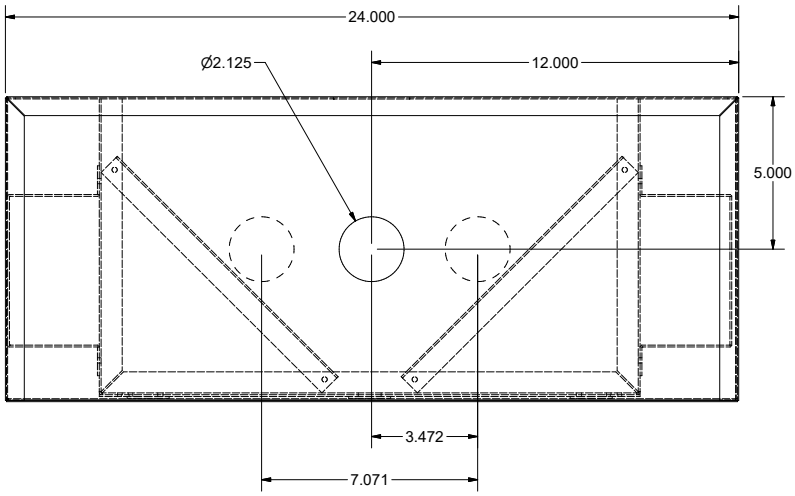

Product Description
Add Floating Shelf Puck light holes (specify number and location with drawing), lot charge per shelf. **Note:** Puck light holes cannot be placed in the same location as internal mounting bracket(s). Engineering must verify hole placement is possible based on internal brackets shown in the diagrams to the left.
SKU
PUCK

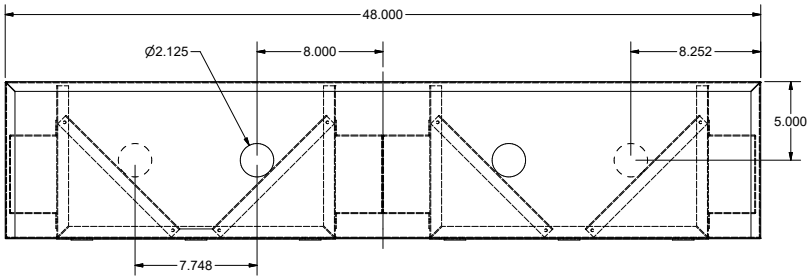

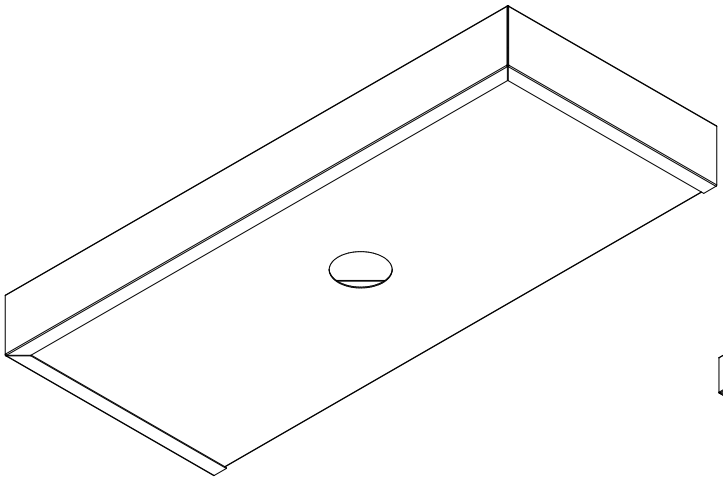

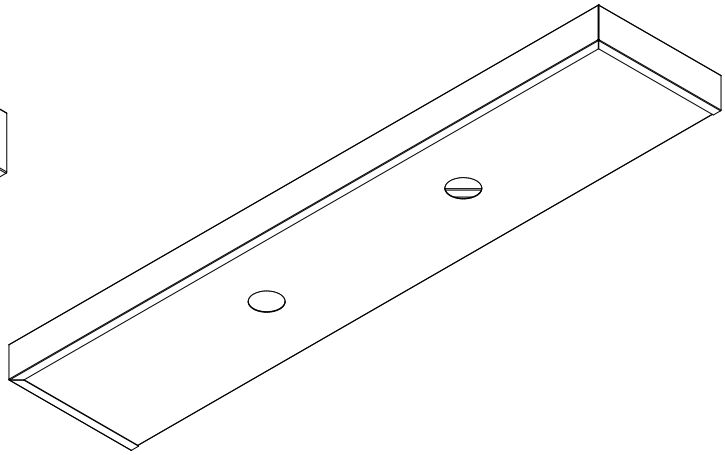

Wall Cabinets

- Available in 3″ increments from 12″ to 48″ wide.
- Standard heights range from 15″ to 42″.
- Cabinet depth is 13″ (13.88″ including door).
- Two doors are furnished with cabinets from 24″ to 48″ in width.
- Includes 1-3 shelves depending on the height of the cabinets.
- Wall units require PVC CLEAT material on top and bottom notches to be hung.
- Every wall cabinet comes with:
  - top and bottom finished panels
  - standard stainless bar pulls
- The wall cabinet line includes diagonal corner and blind corner wall cabinet options.
- Finished side panels are optional and are available in two configurations:
  - Flush to the cabinet side (WFE) or .75″ thick panel flush to the face of the door (WSP). Doors may be ordered in different styles or open for glass (OFG).
  - Wall cabinetry may also be fitted with standard or stainless legs and used as shallow depth base cabinets (accessory part name: WALL LEG KIT).

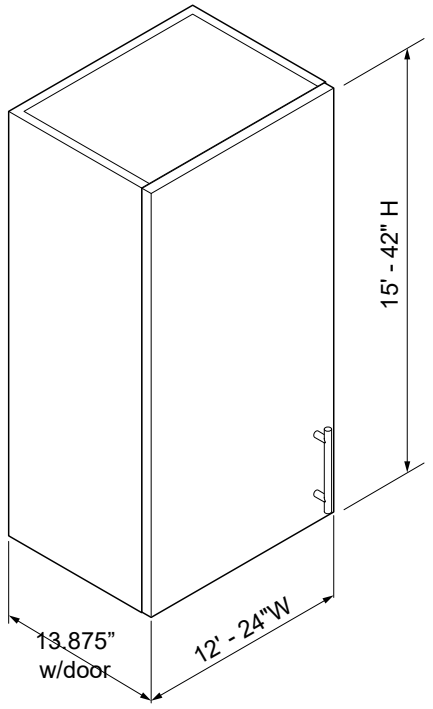

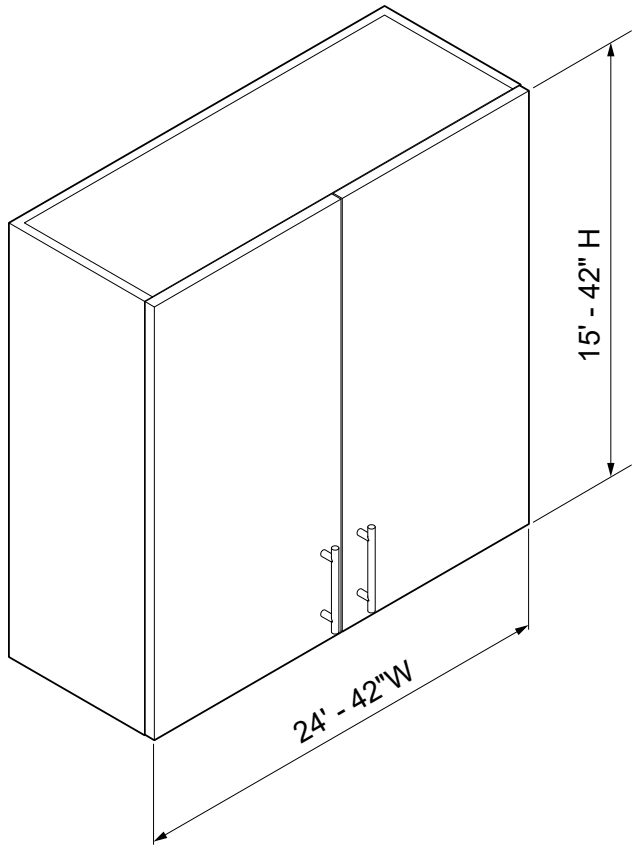

Wall Cabinet Nomenclature

- All Danver Base cabinets use specific nomenclature designed to help you find the specific type needed.
- Standard wall cabinet depth is 13″.
- Specify "**-24**" after the part number for 24″ depth cabinets. Example: **WS2421-24**.

Single Door Wall Cabinet part number nomenclature; example:			
WS1821-RH: 18” Single Door Cabinet			
WS	**18**	**21**	**RH**
Style	**Width**	**Height**	**Hinge**
Style	Cabinet Width in inches	Cabinet Height in inches	Left or Right Hand

Double Door Wall Cabinet part number nomenclature; example:		
WS3636: 36” Double Door Cabinet		
WS	**36**	**36**
Style	**Width**	**Height**
Style	Cabinet Width in inches	Cabinet Height in inches

Wall Cabinets - Single door: WSxxyy-LH/RH

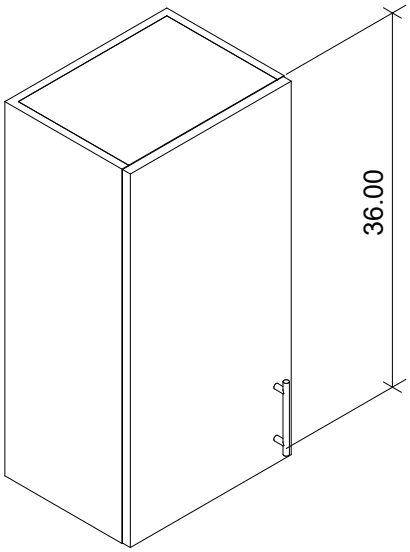

Product Description	
WS: Single Door Wall Cabinets	
15” Height SKU	18” Height SKU
WS1215-LH	WS1218-LH
WS1215-RH	WS1218-RH
WS1515-LH	WS1518-LH
WS1515-RH	WS1518-RH
WS1815-LH	WS1818-LH
WS1815-RH	WS1818-RH
WS2115-LH	WS2118-LH
WS2115-RH	WS2118-RH
21” Height SKU	24” Height SKU
WS1221-LH	WS1224-LH
WS1221-RH	WS1224-RH
WS1521-LH	WS1524-LH
WS1521-RH	WS1524-RH
WS1821-LH	WS1824-LH
WS1821-RH	WS1824-RH
WS2121-LH	WS2124-LH
WS2121-RH	WS2124-RH
30” Height SKU	36” Height SKU
WS1230-LH	WS1236-LH
WS1230-RH	WS1236-RH
WS1530-LH	WS1536-LH
WS1530-RH	WS1536-RH
WS1830-LH	WS1830-LH
WS1830-RH	WS1830-RH
WS2130-LH	WS2136-LH
WS2130-RH	WS2136-RH
39” Height SKU	42” Height SKU
WS1239-LH	WS1242-LH
WS1239-RH	WS1242-RH
WS1539-LH	WS1542-LH
WS1539-RH	WS1542-RH
WS1839-LH	WS1842-LH
WS1839-RH	WS1842-RH
WS2139-LH	WS2142-LH
WS2139-RH	WS2142-RH
WS2439-LH	WS2442-LH
WS2439-RH	WS2442-RH

Wall Cabinets - Double door: WSxxyy

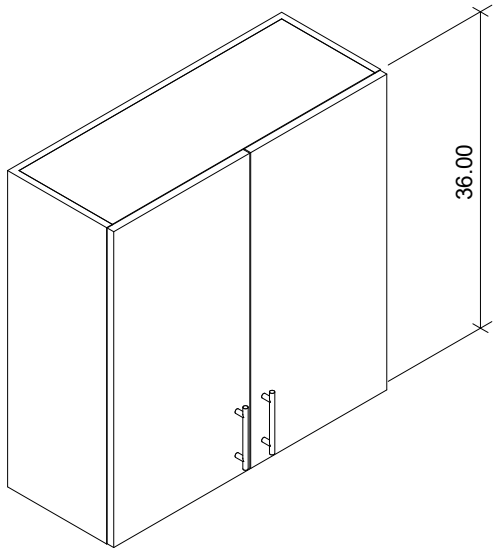

Product Description	
WS: Double Door Wall Cabinets	
12” Height SKU	
WS3612	
15” Height SKU	18” Height SKU
WS2415	WS2418
WS2715	WS2718
WS3015	WS3018
WS3315	WS3318
WS3615	WS3618
WS3915	WS3918
WS4215	WS4218
21” Height SKU	24” Height SKU
WS2421	WS2424
WS2721	WS2724
WS3021	WS3024
WS3321	WS3324
WS3621	WS3624
WS3921	WS3924
WS4221	WS4224
30” Height SKU	36” Height SKU
WS2430	WS2436
WS2730	WS2736
WS3030	WS3036
WS3330	WS3336
WS3630	WS3636
WS3930	WS3936
WS4230	WS4236
39” Height SKU	42” Height SKU
WS2439	WS2442
WS2739	WS2742
WS3039	WS3042
WS3339	WS3342
WS3639	WS3642
WS3939	WS3942
WS4239	WS4242
WS4539	WS4842
WS4839	N/A

Wall Cabinets - 24” Deep: WSxxxx-24

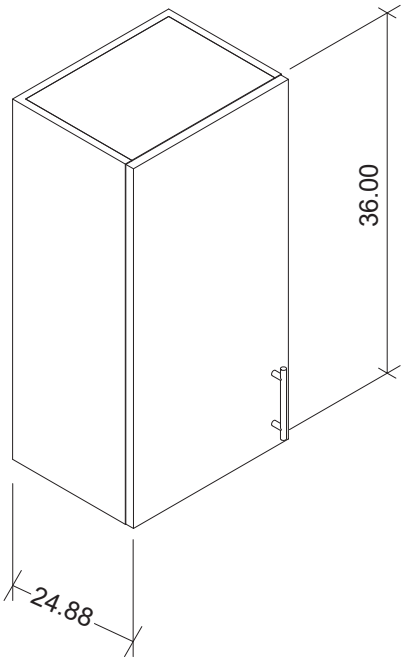

Product Description	
WS: 24” DEEP Double or Single Door Wall Cabinets	
12” Height SKU	
WS2412-24	
WS3012-24	
WS3612-24	
15” Height SKU	18” Height SKU
WS1515-24 (single)	WS1518-24 (single)
WS3315-24	WS3018-24
WS3615-24	WS3318-24
21” Height SKU	24” Height SKU
WS2421-24	WS1224-24
WS3321-24	WS3324-24
WS3621-24	WS3624-24
30” Height SKU	36” Height SKU
WS2430-24	WS2436-24
39” Height SKU	42” Height SKU
WS3039-24	WS3042-24

Wall Cabinets - Microwave: MWCxxxx

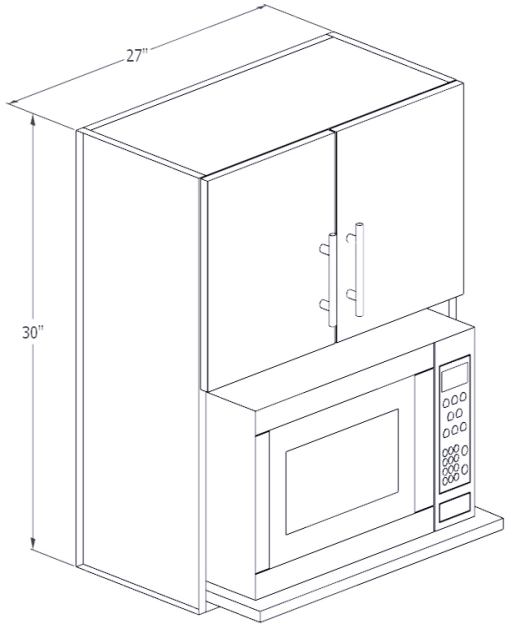

Product Description	
MWC: Microwave Wall Cabinets	
30” Height SKU	
MWC2730	
MWC3030	
36” Height SKU	42” Height SKU
MWC2736	MWC2742
MWC3036	MWC3042
	MWC3042-24

Wall Cabinets - Diagonal Corner: DCWxx, Blind Corner: WBxxxx

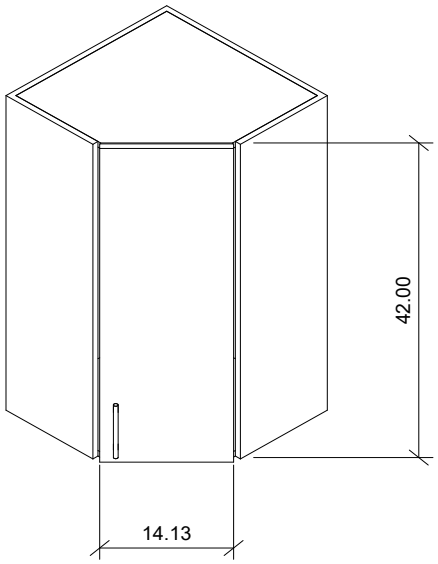

Product Description
DCW: Diagonal Corner Wall Cabinets 24" x 24" deep, XX"H. 1 door.
SKU
DCW15-LH
DCW15-RH
DCW18-LH
DCW18-RH
DCW21-LH
DCW21-RH
DCW24-LH
DCW24-RH
DCW30-LH
DCW30-RH
DCW36-LH
DCW36-RH
DCW42-LH
DCW42-RH

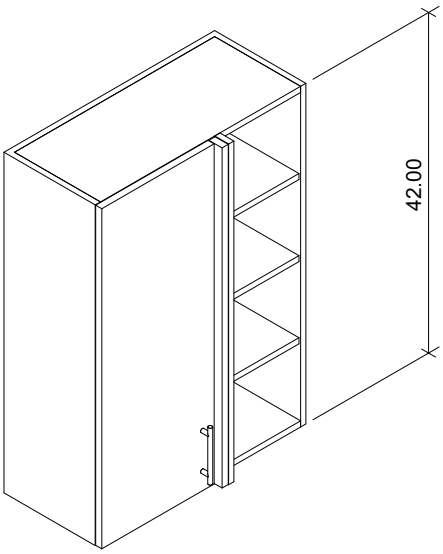

Product Description	
WB: Blind Corner Wall Cabinets, 1 door.	
24” Height SKU	30” Height SKU
WB2724-LH	WB2730-LH
WB2724-RH	WB2730-RH
WB3024-LH	WB3030-LH
WB3024-RH	WB3030-RH
36” Height SKU	42” Height SKU
WB2736-LH	WB2742-LH
WB2736-RH	WB2742-RH
WB3036-LH	WB3042-LH
WB3036-RH	WB3042-RH

Wall Accessories - Side Panels: WSP, Flush End Panels: WFE

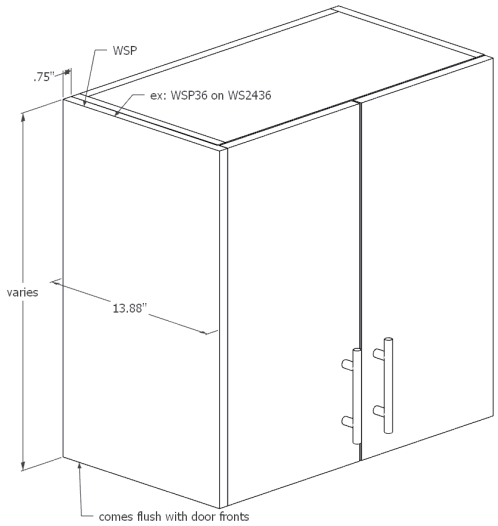

Product Description
WSP: ¾" Thick side panels for wall cabinets. XX"H, panels sit flush with door/drawer faces. Specify based on cabinet side and height. Example SKUs: WSP15L, WSP24R, WSP36L, WSP42R

Wall Cabinet Side Panel Nomenclature		
Example: WSP15L		
WSP	XX	X
Prefix	**Height**	**Side**
Example SKUs: WSP18L, WSP21R, WSP33L, WSP39R		

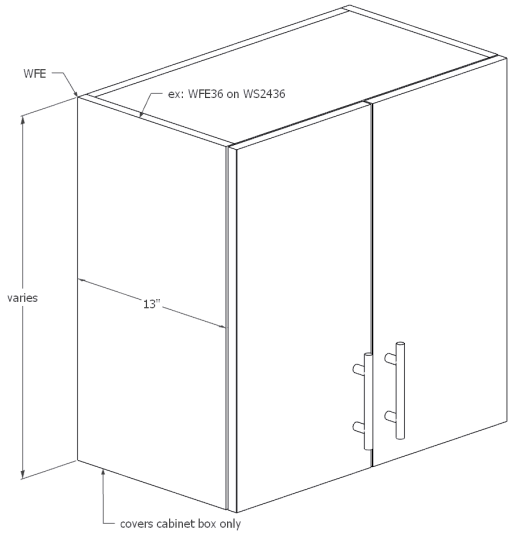

Product Description
WFE: Flush side panels for wall cabinets. 13"W, panels sit flush with cabinet box. Specify based on cabinet side and height. Example SKUs: WFE18L, WFE21R, WFE33L, WFE39R

Wall Accessories - Front Fillers: WFL, Corner Fillers: WFC

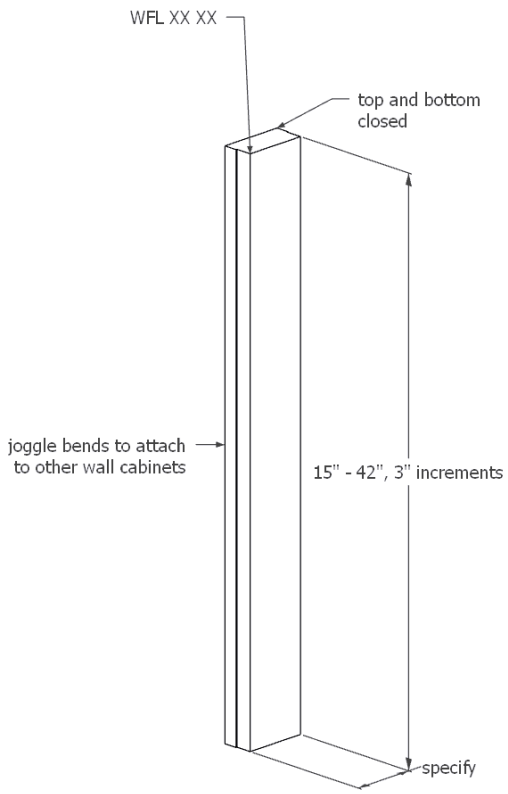

Product Description
WFL: Wall cabinet front filler, sits flush with door faces, attaches between two wall cabinets. Use this filler when using a wall cabinet as a base cabinet with the addition of a Wall Leg Kit. 1”W minimum, available in 1/8” increments as needed.

Wall Cabinet Front Filler Nomenclature		
Example: WFL 30 3.75		
WFL	XX	XX
Prefix	**Width**	**Height**
Example SKUs: WFE18L, WFE21R, WFE33L, WFE39R		

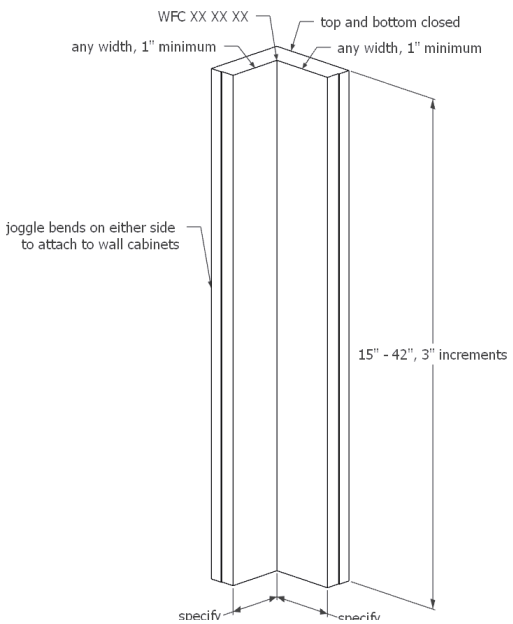

Product Description
WFC: Wall cabinet front 90-degree corner filler, sits flush with door faces, attaches between two wall cabinets. 2”W overall, 1”W minimum on each side of bend, available in 1/8” increments as needed.

Wall Cabinet Front Filler Nomenclature			
Example: WFC 24 3.63 2.00			
WFC	XX	XX	XX
Prefix	**Height**	**Left Dim.**	**Right Dim.**
Example SKUs: WFC 18 4.00 4.00, WFC 36 3.50 3.00			

Wall Accessories - Light Rail, PVC Cleat

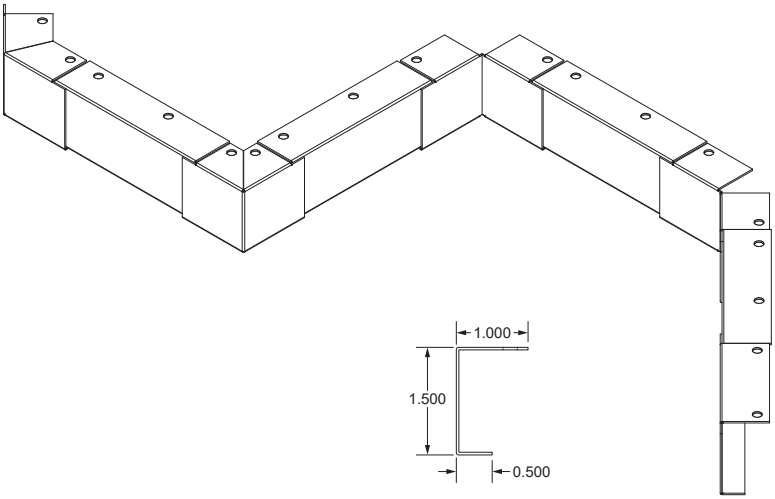

Product Description
Light Rail – Stainless light rail for wall cabinets. Comes in 84” lengths, cut onsite as needed. Can be powder coated to match cabinets.

SKU		
Light Rail	1.5”H	3.0”H
	LR STRAIGHT 1.5	LR STRAIGHT 3.0
90-degree inside corner	LR 90 IN 1.5	LR 90 in 3.0
90-degree outside corner	LR 90 OUT 1.5	LR 90 OUT 3.0
135-degree inside corner	LR 135 IN 1.5	LR 135 IN 3.0
135-degree outside corner	LR 135 OUT 1.5	LR 135 OUT IN 3.0
Straight Splice	LR SPLICE 1.5	LR SPLICE 3.0

Product Description
PVC Cleat: Required cleat for hanging wall cabinets. Comes in 60” x 3”H lengths, cut onsite as needed.

Island Insert Cabinets

Designers and builders of masonry island kitchens are now offered a complete line of door, drawer/door, drawer combinations and pullout cabinetry to construct a totally functional kitchen. The line features the optional Clean-Stor® box that attaches to door fronts to create useful storage and organization. The Clean-Stor box eliminates the infamous "masonry black hole" that lurks behind access doors. The steel construction is superior to presently used insert materials that are subject to warping, rotting and mildew. The Clean-Stor box comes with a shelf and provides clean dry storage.
Doors exhibit the same stainless quality, "heft & weight" and solid close as the modular cabinetry line allowing additional design flexibility by using both lines to create the ideal kitchen while retaining a consistent "look". Door and drawer faces can be upgraded to any door style and be powder coated to compliment your outdoor kitchen.

The insert line includes:

- One and Two Drawer Units
- Door and Drawer Combination Units
- One and Two Door (and frame) Units
- Paper Towel Dispenser
- Trash and Propane Pullouts

Access Door Inserts may be purchased with just the frame and doors or combined with the "Clean-Stor" box as a complete unit.

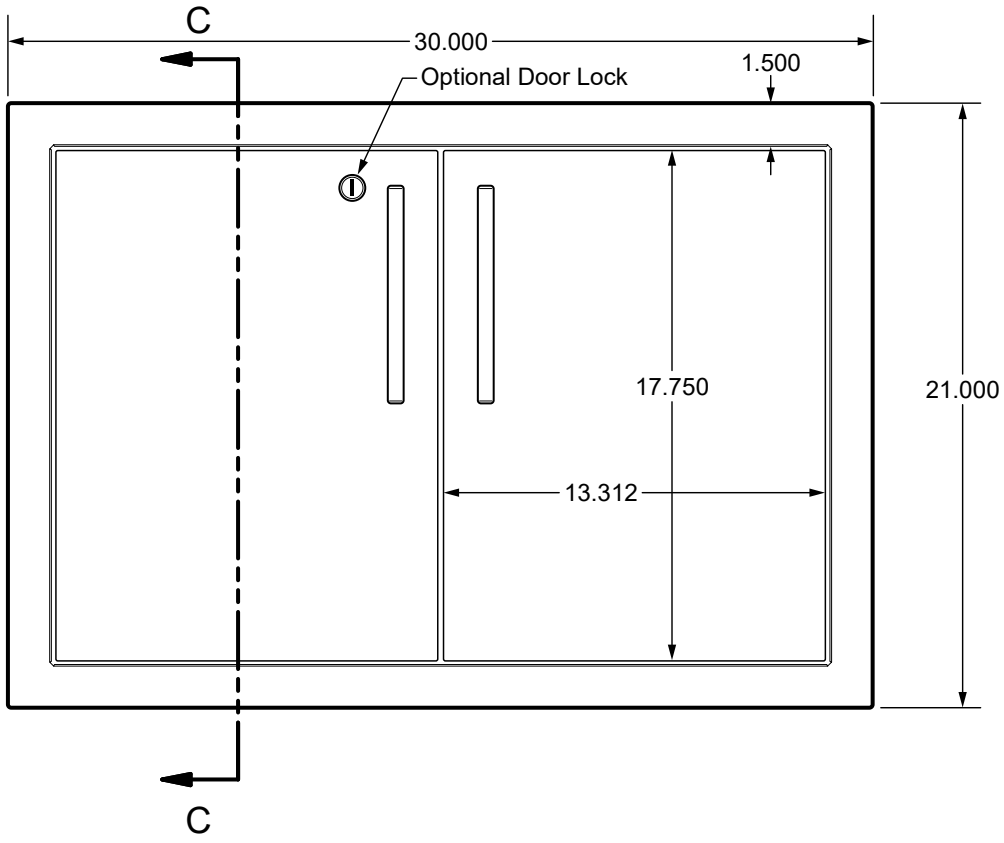

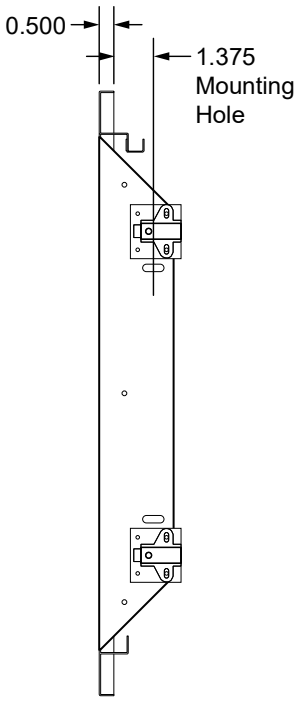

SECTION C-C

Island Insert Cabinets - Access Doors: IDRxxxx-1, IDRxxxx-2

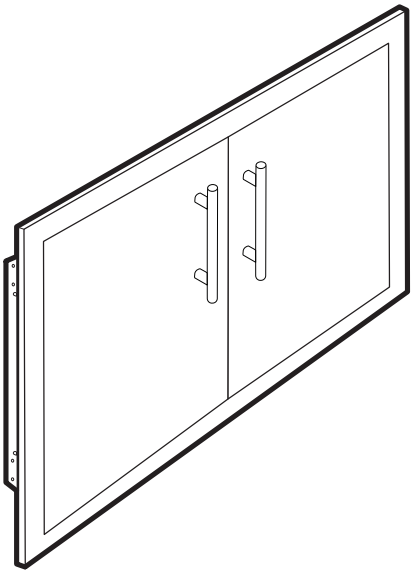

Product Description		
IDR: Access Door		
SKU		
SKU	Description	Cut Out Size
IDR1621-1	16”W x 21”H Frame, One Flush Access Door	13⅝”W x 19½”H
IDR1725-1	17”W x 25”H Frame, One Flush Access Door	14⅝”W x 23½”H
IDR2121-1	21”W x 21”H Frame, One Flush Access Door	18⅝”W x 19½”H
IDR2721-2	27”W x 21”H Frame, Two Flush Access Doors	24⅝”W x 19½”H
IDR3021-2	30”W x 21”H Frame, Two Flush Access Doors	27⅝”W x 19½”H
IDR3025-2	30”W x 25”H Frame, Two Flush Access Doors	27⅝”W x 23½”H
IDR3621-2	36”W x 21”H Frame, Two Flush Access Doors	33⅝”W x 19½”H
IDR4221-2	42”W x 21”H Frame, Two Flush Access Doors	39⅝”W x 19½”H

Island Insert Cabinets - Clean-Stor® Box with Shelf

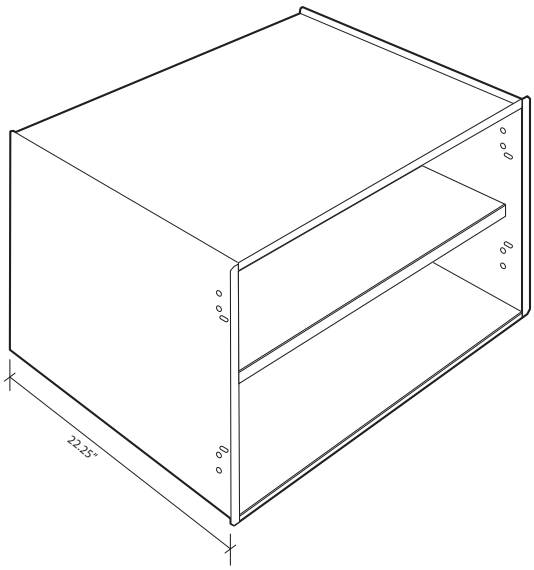

Product Description	
Galvanized Storage Box to install behind frame (order at the same time as Access Doors). NOTE: All Clean-Stor® boxes are 22¼" Deep	
24" Depth SKU	**Description**
IDR1621-B	Clean-Stor® storage box for IDR1621
IDR1725-B	Clean-Stor® storage box for IDR1725
IDR2121-B	Clean-Stor® storage box for IDR2121
IDR2721-B	Clean-Stor® storage box for IDR2721
IDR3021-B	Clean-Stor® storage box for IDR3021
IDR3025-B	Clean-Stor® storage box for IDR3025
IDR3621-B	Clean-Stor® storage box for IDR3621
IDR4221-B	Clean-Stor® storage box for IDR4221

Island Insert Cabinets - Clean-Stor® Box Drawer Sets: IDWxxxx

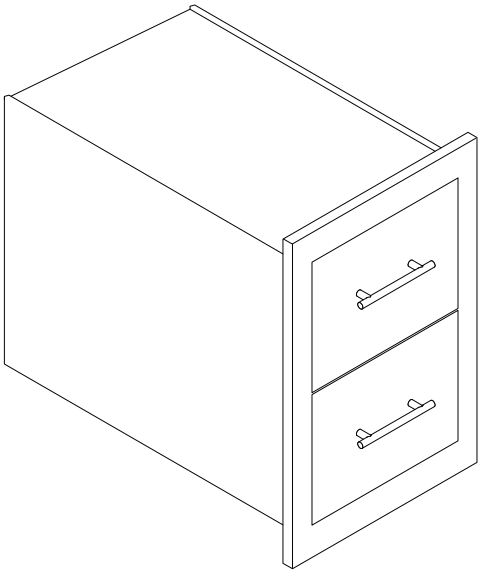

Product Description		
IDW: Drawer Sets		
SKU		
SKU	Description	Cut Out Size
IDW1621-2	16”W x 21”H Frame, Two Drawers w/box	13⅝”W x 19½”H
IDW1630-3	16”W x 30”H Frame, Two Drawers w/box	13⅝”W x 28½”H

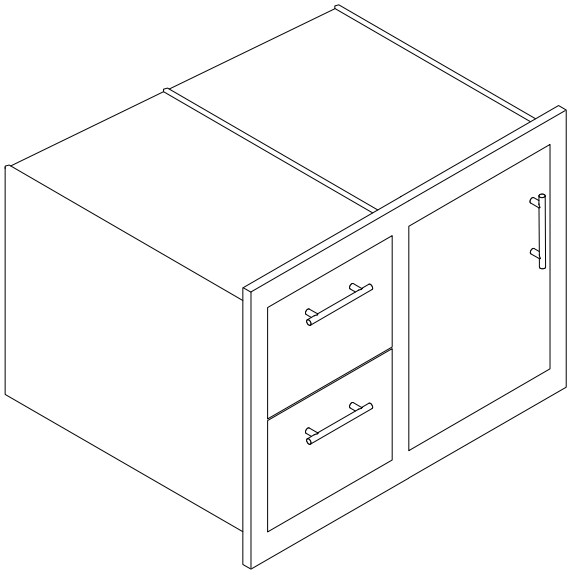

Product Description		
IC: Door and Drawer Sets		
SKU		
SKU	Description	Cut Out Size
IC3021-21	30”W x 21”H Frame, Two Drawers, One door, 2 Separate boxes. Specifiy drawers on left or right of door.	27⅝”W x 19½”H

Island Insert Cabinet - Accessories

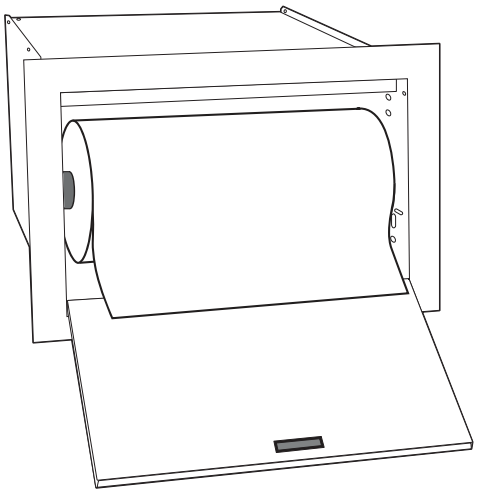

Product Description		
Insert: Accessories		
SKU		
SKU	Description	Cut Out Size
ITR1725	17"W x 21"H Frame with Trash Pull Out	14⅝”W x 23½”H
IPR1725	17"W x 25"H Frame with Propane Pull Out	14⅝”W x 23½”H
IPT1711	17"W x 11"H Paper Towel Dispenser	15½”W x 8⅝”H

Elements by Tecno™

All Elements by Tecno Base cabinets and accessories use the prefix: ELEM, which is designed to help you find the specific type needed

Specify right or left hinge on doors where needed.

ELEMENTS Grill base cabinets are designed to house grills that are 3" smaller than the overall cabinet width.

Ex: Alfresco 42" Grill would be housed in an ELEM OGB4520.

Base Cabinet part number nomenclature; example:						
ELEM OBF1801-RH: 18″ Full Height Door Cabinet						
ELEM	**OB**	**F**	**18**	**0**	**1**	**RH**
Prefix	**Base**	**Style**	**Width**	**Drawers**	**Doors**	**Hinge**
Designates Elements products	Category *	Base Style**	Base Width in inches	Number of Drawers	Number of Doors	Left or Right Hand

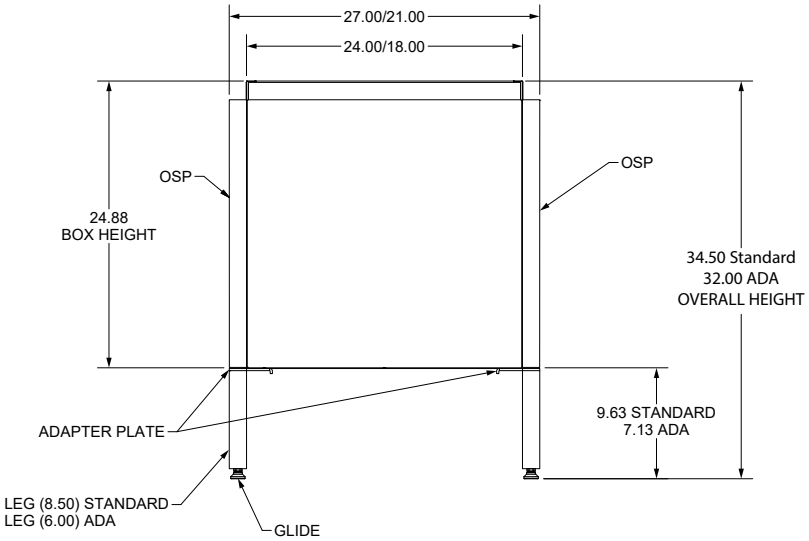

FRONT VIEW

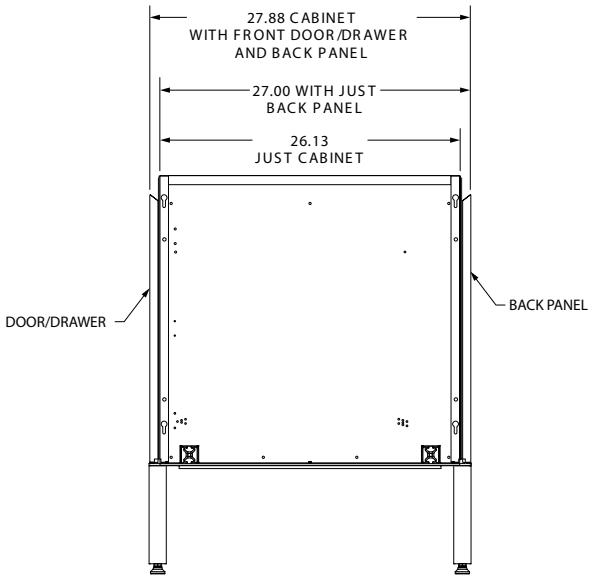

SIDE VIEW

Elements by Tecno™ - Powder Coat Guide

BROWN JORDAN®
OUTDOOR KITCHENS™

Use this helpful guide for picking the powder coat color options when ordering Elements cabinets.

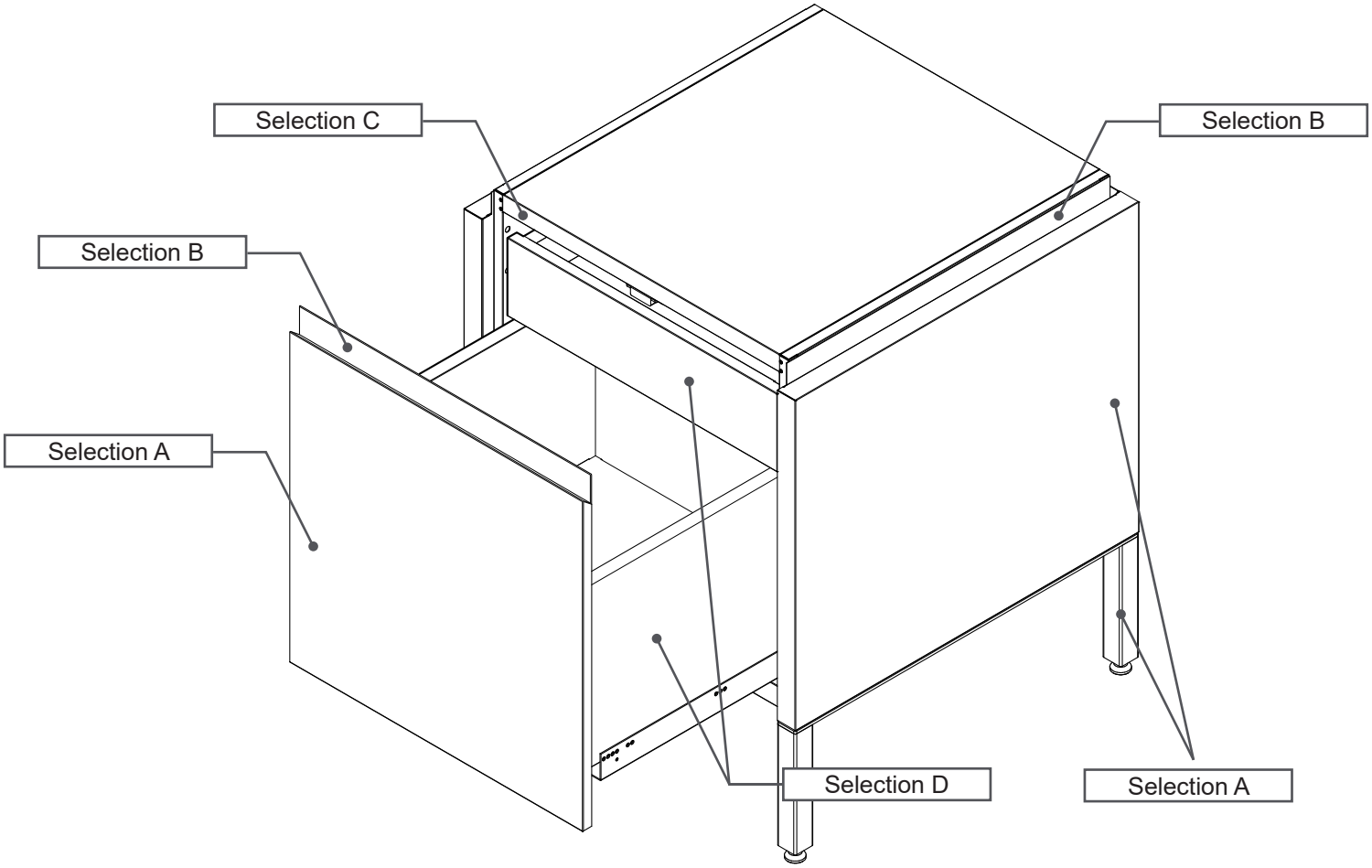

BROWN JORDAN is a registered trademark of Brown Jordan International, Inc. and is used under license to CT Acquisitions, LLC.

Elements by Tecno™ - Powder Coat Guide

POWDER COAT - Determines the Powder Coat Finish on Elements Door Panels, Side Panels, Back Panels, and Cabinet Frames.

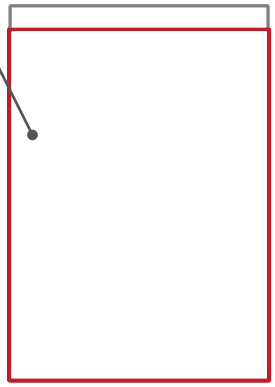

Selection A
Elements Door Front Powder Coat

DOOR BACK - Determines the Powder Coat Finish on Elements Rear Door Panels/Top Front Reveal of doors, cabinet Side Panels and Back Panels

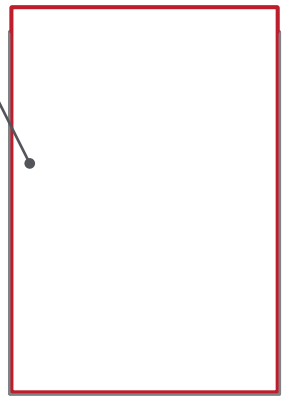

Selection B
Elements Door Rear Powder Coat

CABINET INTERIOR - Determines the Powder Coat Finish for The Interior

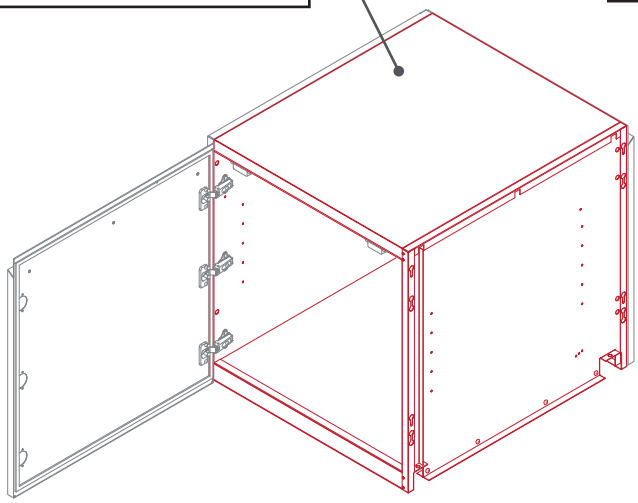

Selection C
Elements Cabinet Interior

DRAWER INTERIOR - Determines the Powder Coat Finish for the Interior drawer face and box of Elements Cabinets

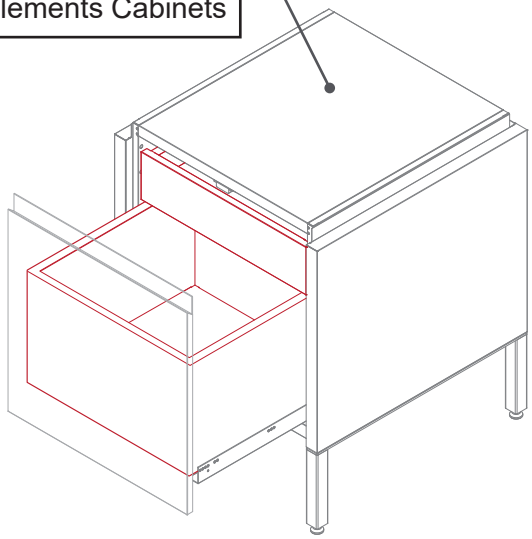

Selection D
Elements Drawer Interior

Elements by Tecno™ - Side Burner Bases: ELEM OBB

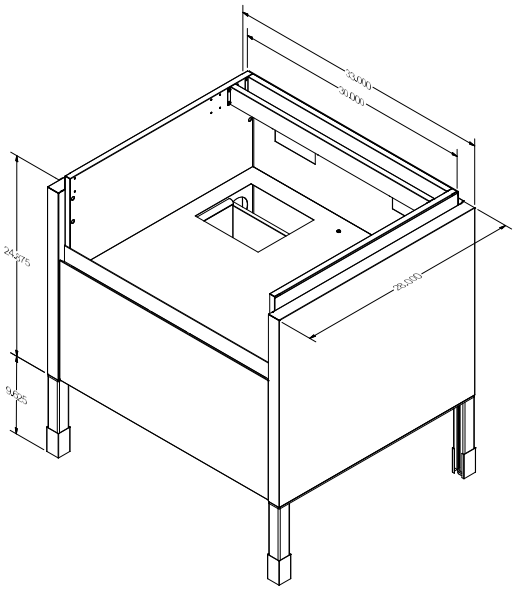

Product Description
ELEM OBB: ELEMENTS - Side Burner Base, 27.88"D consisting of front, cabinet box, and included back panel. 1 Drawer. 24.88”H cabinet box, 34.5”H standard total height, 32.00”H ADA height.

SKU
ELEM OBB1510
ELEM OBB1810
ELEM OBB2410

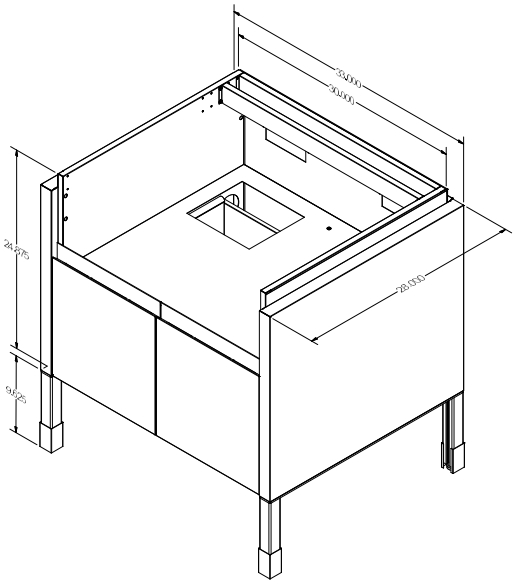

Product Description
ELEM OBB: ELEMENTS - 30''W Base, 27.88"D consisting of front, cabinet box, and included back panel. 2 Drawers. 24.88”H cabinet box, 34.5”H standard total height, 32.00”H ADA height.

SKU
ELEM OBB3020

Elements by Tecno™ - Full-Height Door Bases

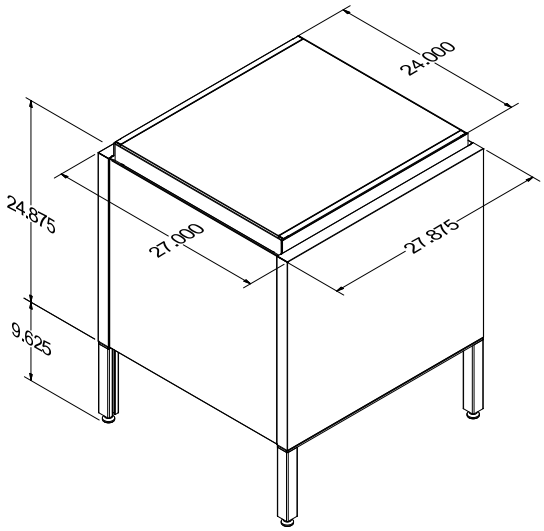

Product Description
ELEM OBF: ELEMENTS - Full-Height Door Base, 27.88"D consisting of front, cabinet box, and included back panel. 1 Full-Height Door. Includes adjustable half depth shelf. 24.88”H cabinet box, 34.5”H standard total height, 32.00”H ADA height.

SKU
ELEM OBF1501-LH
ELEM OBF1501-RH
ELEM OBF1801-LH
ELEM OBF1801-RH
ELEM OBF2401-LH
ELEM OBF2401-RH

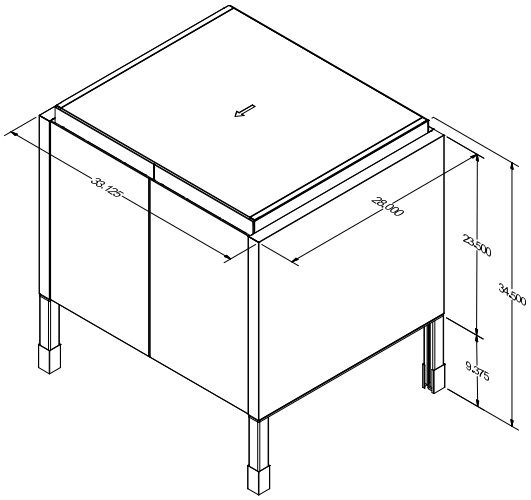

Product Description
ELEM OBF: ELEMENTS - 2 Full-Height Doors. 27.88"D consisting of front, cabinet box, and included back panel. Includes adjustable half depth shelf. 24.88”H cabinet box, 34.5”H standard total height, 32.00”H ADA height.

SKU
ELEM OBF3002
ELEM OBF3602

Elements by Tecno™ - Garage Bases, Multi-Drawer Bases

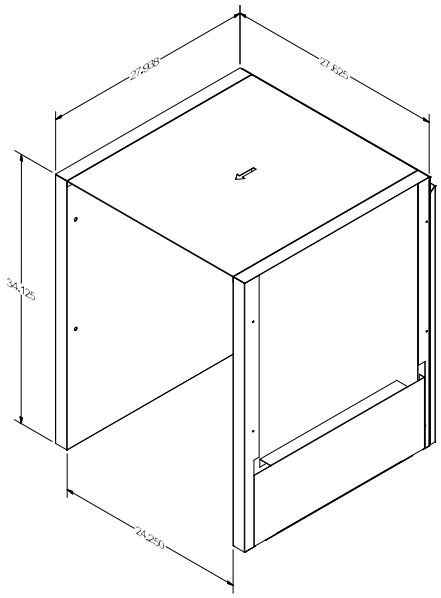

Product Description
ELEM OBG: ELEMENTS – 18.38"W **with 15”W opening**, 27.88"D. Undercounter Refrigeration Garage/Storage Area for placement in the middle of a run: Consists of three 34.5"H panels with small leveling feet: left side panel with cutouts for frame, right side panel with cutouts for frame, and a back panel that matches other Elements cabinets.

SKU
ELEM OBG1500
ELEM OBG1500 ADA
ELEM OBG1800
ELEM OBG1800 ADA
ELEM OBG2400
ELEM OBG2400 ADA

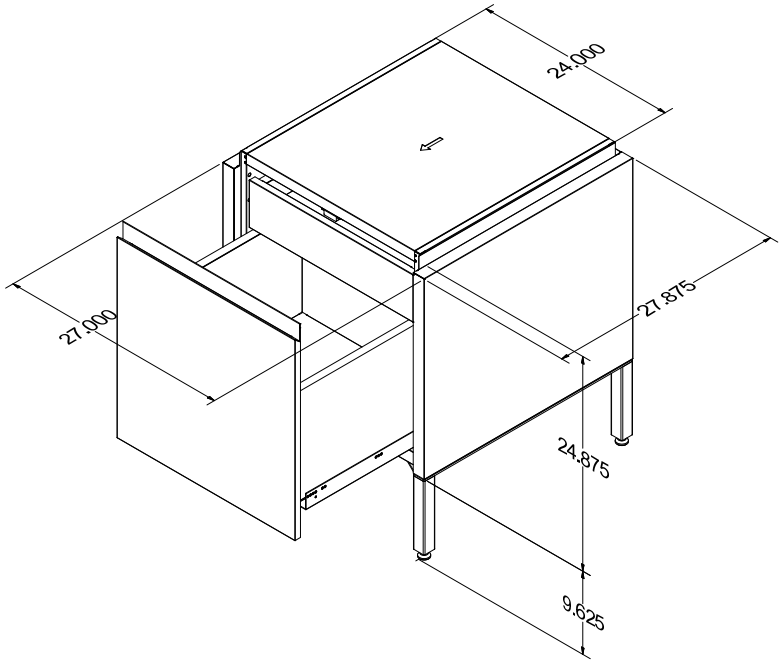

Product Description
ELEM OBM: Multi-Drawer Cabinet Base, 27.88"D consisting of fronts, cabinet box, and included back panel. 2 Drawers: 1 Full-Height Drawer Front attached to bottom drawer, 1 Nested Drawer inside located at top. 24.88”H cabinet box, 34.5”H standard total height.

SKU
ELEM OBM1520
ELEM OBM1820
ELEM OBM2420
ELEM OBM3020

Elements by Tecno™ - Open Bases, Pass-Through Bases

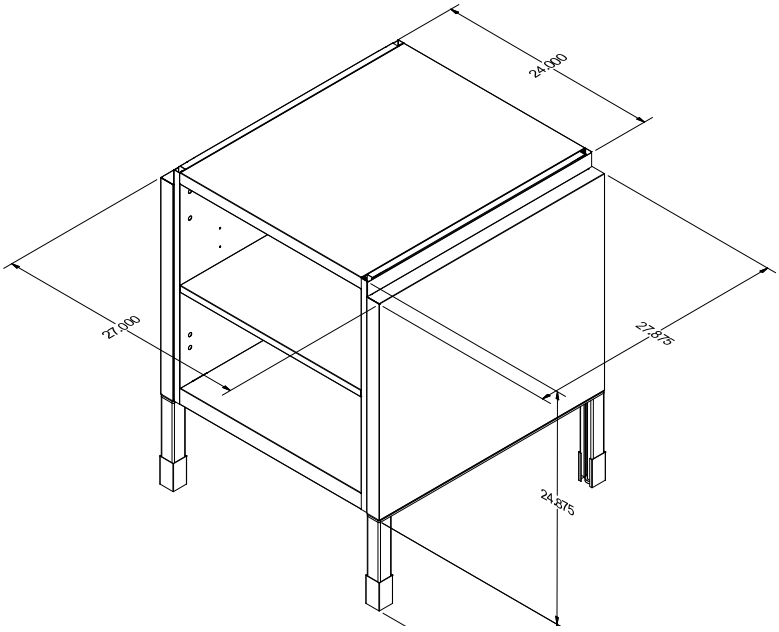

Product Description
ELEM OBO: ELEMENTS Open Base, 27.88"D consisting of a cabinet box open in the front and back (no door or drawer fronts). 24.88”H cabinet box, 34.5”H standard total height, 32.00”H ADA height. Includes adjustable full depth shelf.

SKU
ELEM OBO1500
ELEM OBO1800
ELEM OBO2400
ELEM OBO3000

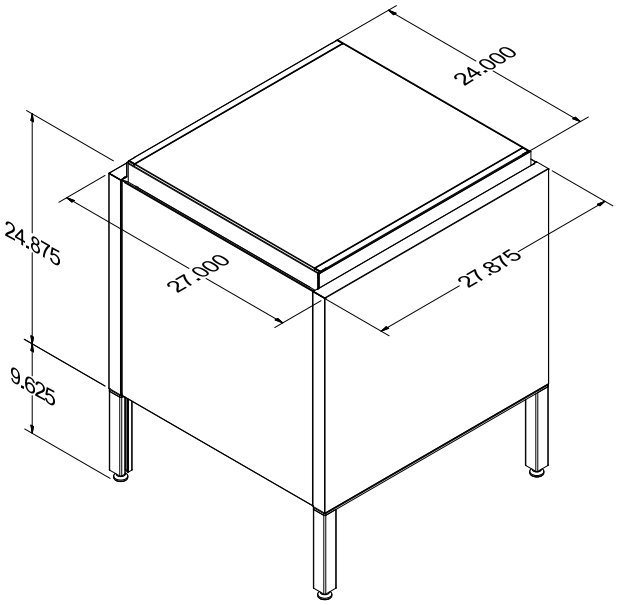

Product Description
ELEM OBPT: ELEMENTS Pass-Through Base, 27.88"D consisting of fronts and cabinet box. 2 Full Height Doors (one in front, one in back), Front Door Left-Hinged, Back Door Left-Hinged. Includes fixed half-depth shelf. 24.88”H cabinet box, 34.5”H standard total height, 32.00”H ADA height.

SKU
ELEM OBPT1802-LH-LH
ELEM OBPT1802-LH-RH
ELEM OBPT1802-RH-RH
ELEM OBPT1802-RH-LH
ELEM OBPT2402-LH-LH
ELEM OBPT2402-LH-RH
ELEM OBPT2402-RH-RH
ELEM OBPT2402-RH-LH

Elements by Tecno™ - Sink Bases, Trash Bases

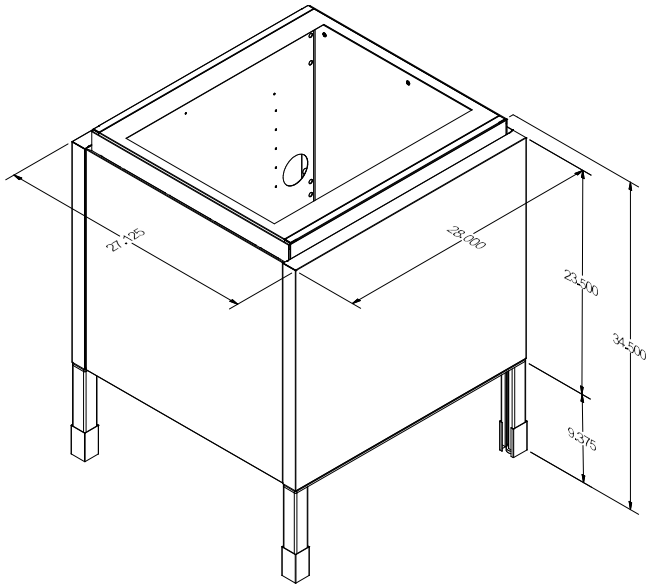

Product Description
ELEM OBS: ELEMENTS - Sink Base, 27.88"D consisting of front, cabinet box, and included back panel. 1 Full-Height Door. 24.88”H cabinet box, 34.5”H standard total height, 32.00”H ADA height.

SKU
ELEM OBS1501-FHD-LH
ELEM OBS1501-FHD-RH
ELEM OBS1801-FHD-LH
ELEM OBS1801-FHD-RH
ELEM OBS2401-FHD-LH
ELEM OBS2401-FHD-RH

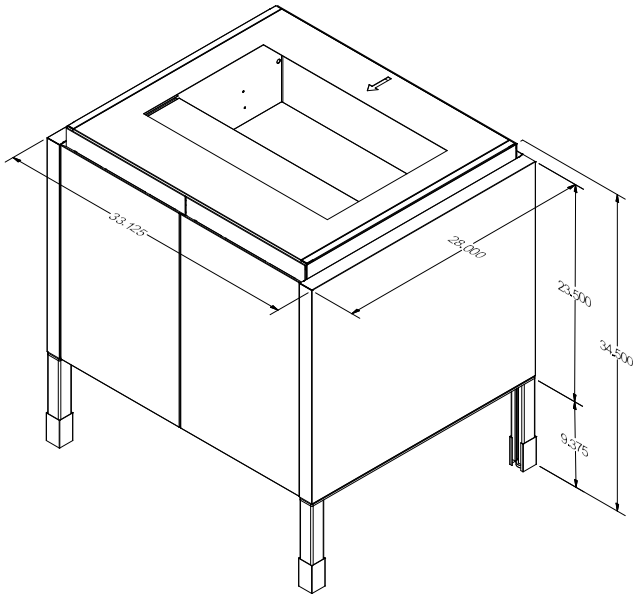

Product Description
ELEM OBS: ELEMENTS - Sink Base, 27.88"D consisting of front, cabinet box, and included back panel. 2 Full-Height Doors. 24.88”H cabinet box, 34.5”H standard total height, 32.00”H ADA height.

SKU
ELEM OBS3002-FHD
ELEM OBS3602-FHD

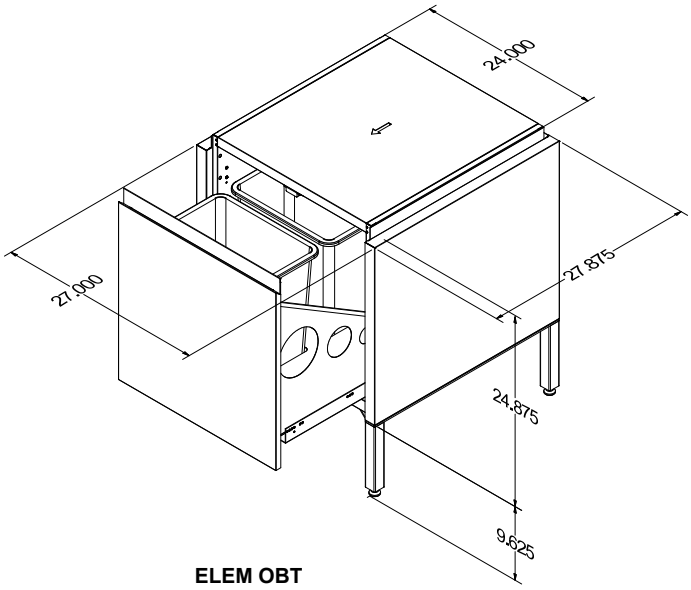

ELEM OBT

Product Description
ELEM OBT: ELEMENTS - 15''W Base, 27.88"D consisting of front, cabinet box, and included back panel. Trash Cabinet, 1 Full-Height Door attached to Trash Pull mechanism. 24.88”H cabinet box, 34.5”H standard total height, 32.00”H ADA height.

SKU
ELEM OBT1500
ELEM OBT1800
ELEM OBT2400

Elements by Tecno™ - Grill Cabinets

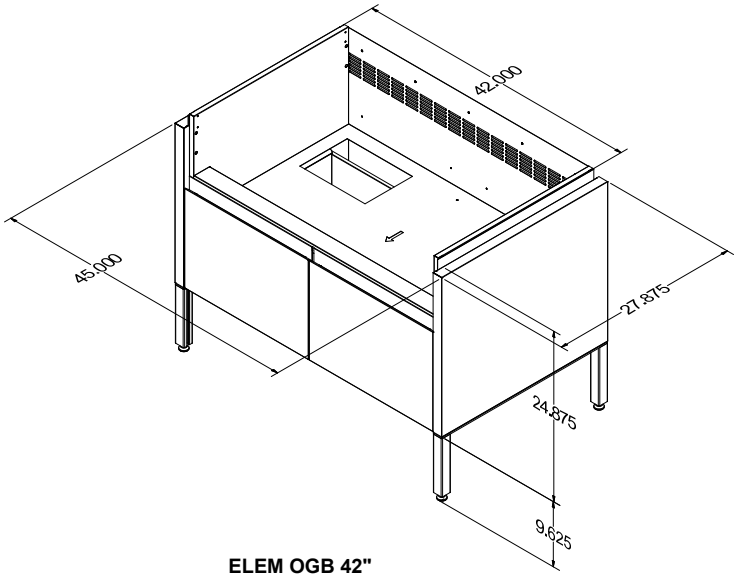

ELEM OGB 42"

Product Description
ELEM OGB: ELEMENTS - Grill Base, 27.88"D consisting of front, cabinet box, and included back panel. 2 Drawers, 11.50" from top of cabinet to Grill Shelf. 24.88”H cabinet box, 34.5”H standard total height, 32.00”H ADA height.

SKU
ELEM OGB3320
ELEM OGB3620
ELEM OGB3920
ELEM OGB4220
ELEM OGB4520
ELEM OGB4820

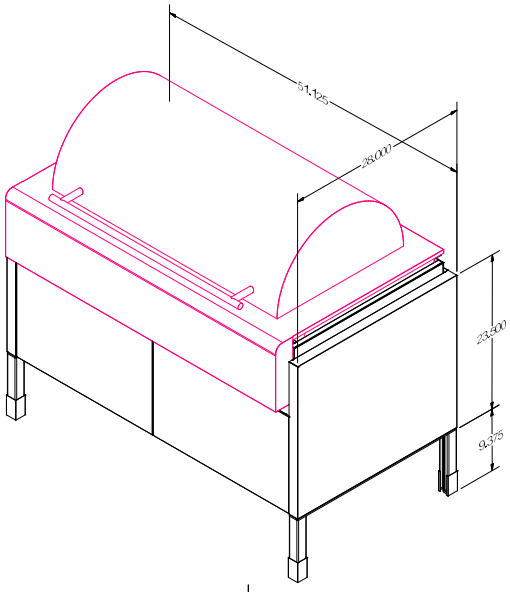

Product Description
ELEM OGB: ELEMENTS - 42''W Grill Base, 27.88"D consisting of front, cabinet box, and included back panel. 2 Drawers, *FOR 42"W CALIBER ROCKWELL GRILL ONLY* *this cabinet cannot be used on the end of a run, please call sales rep to discuss* 24.88”H cabinet box, 34.5”H standard total height, 32.00”H ADA height.

SKU
ELEM OGB4220-CALIBER ROCKWELL
ELEM OGB4820-CALIBER ROCKWELL

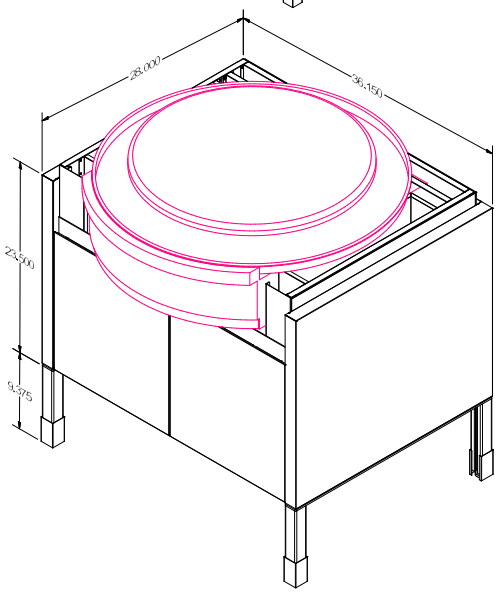

Product Description
ELEM OGB3320-EVO - 33"W Grill Base **FOR EVO GRILL ONLY**, 27.88"D consisting of front, cabinet box, and included back panel. 2 Drawers, 11.50" from top of cabinet to Grill Shelf. 24.88”H cabinet box, 34.5”H standard total height, 32.00”H ADA height. ***Countertop height MUST be 1.25"/3 cm+!***

SKU
ELEM OGB3320-EVO

Elements by Tecno™ - Side Panels: ELEM OSP L-R

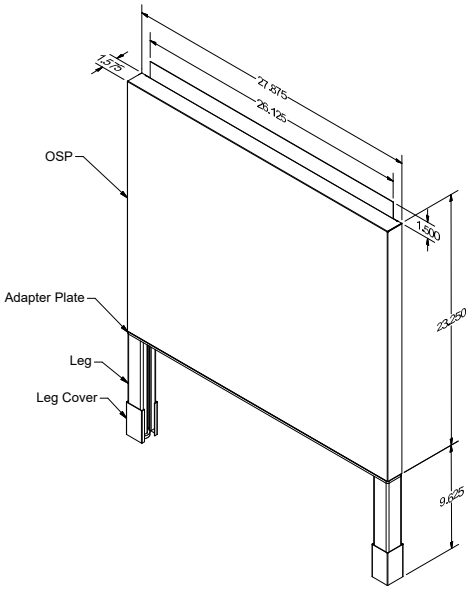

Product Description
ELEM OSP: installs on Elements OBF, OBM, OGB, OBT, OBS, and OBR cabinets*, includes set of 2 legs and adapter plate, 3” leg covers included to cover glides if desired, **legs/leg covers will be same color as cabinet fronts unless otherwise specified**. Interchangeable on either end of run.
SKU
ELEM OSP L-R

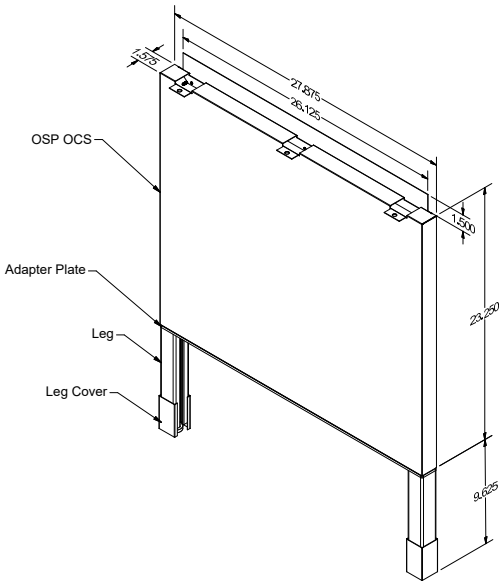

Product Description
ELEM OSP OCS: installs on Elements OBF, OBM, OGB, OBT, OBS, and OBR cabinets WITH CUTOUTS FOR EXTRUSIONS. Includes set of 2 legs and adapter plate, 3” leg covers included to cover glides if desired, **legs/leg covers will be same color as cabinet fronts unless otherwise specified**. Interchangeable on either end of run.
SKU
ELEM OSP L-R OCS

Elements by Tecno™ - Transition, OCS Countertop Support

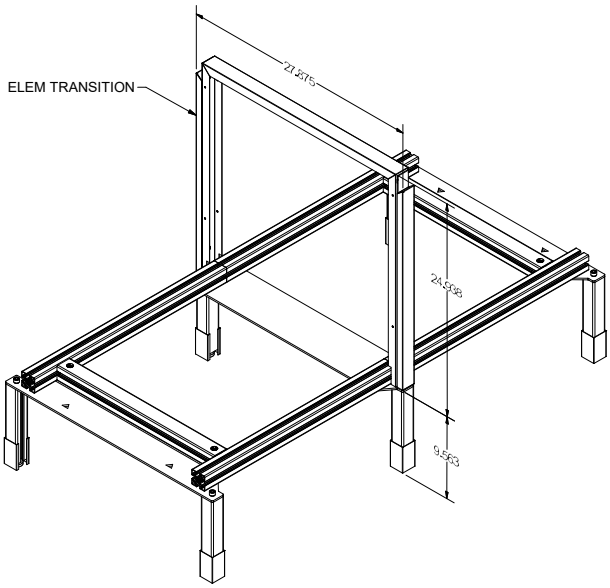

SKU	Description
ELEM TRANSITION	1.575” Thick with matching reveal, includes 2 legs and adapter plate, used for connecting two runs of Elements cabinets (segments of cabinet runs cannot be more than 72”W), *legs/leg covers will be same color as cabinets unless otherwise specified*, 3” leg covers included to cover glides if desired

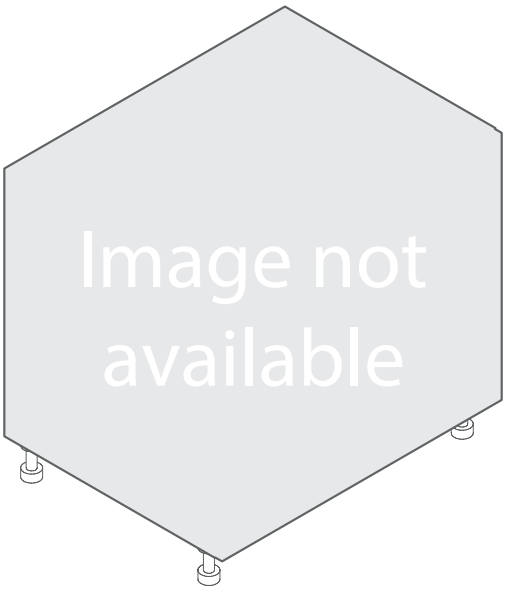

Product Description
ELEM OCS: 1.575” Thick with matching reveal, includes 2 legs and adapter plate, used for connecting two runs of Elements cabinets (segments of cabinet runs cannot be more than 72”W), *legs/leg covers will be same color as cabinets unless otherwise specified*, 3” leg covers included to cover glides if desired

SKU
ELEM OCS30
ELEM OCS33
ELEM OCS36
ELEM OCS39
ELEM OCS42
ELEM OCS45
ELEM OCS48

Cabinet Door Styles - Danver

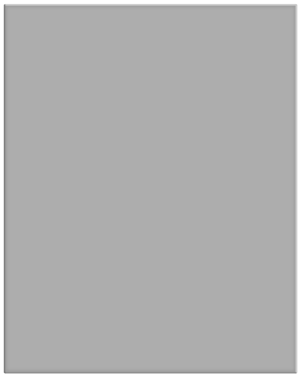

Hampton

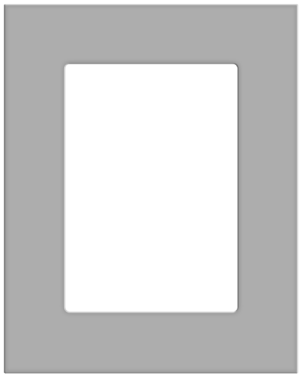

Rio

Key West

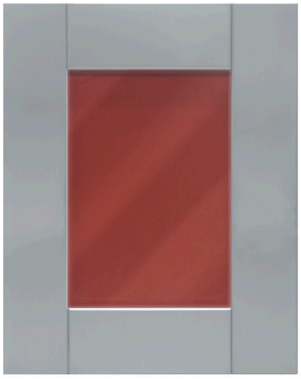

Key West Frosted Glass

Key West Sea Glass

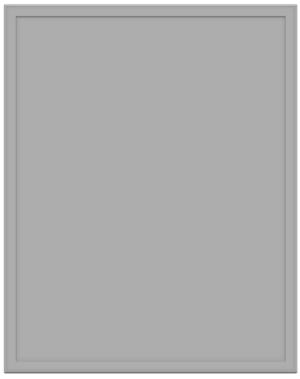

Venice

Cabinet Door Styles - Brown Jordan Outdoor Kitchens

BeadBoard

Louver

Palm Beach

Tecno

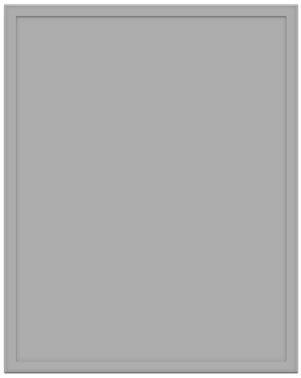

Venice

Cabinet Door Styles - Brown Jordan Outdoor Kitchens

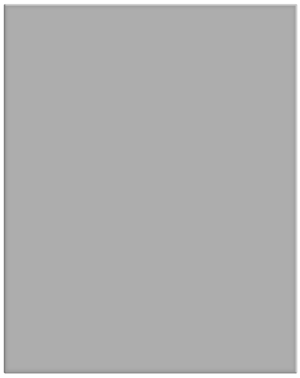

Hampton

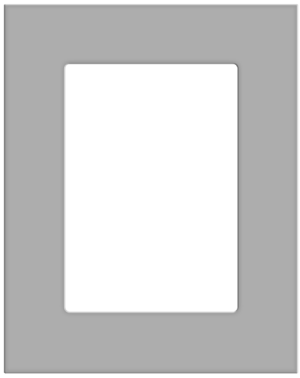

Rio

Key West

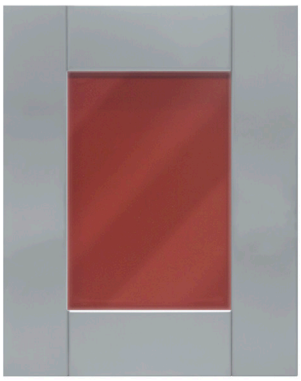

Key West Frosted Glass

Key West Sea Glass

Cabinet Door Styles - Trex Outdoor Kitchens

London

Newport

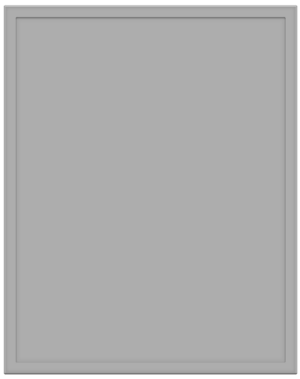

Venice

Key West

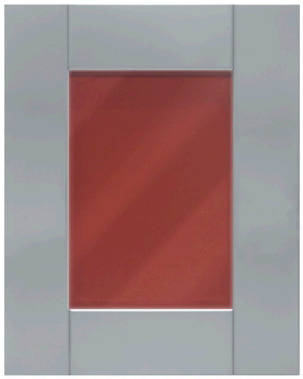

Key West Frost

Key West Sea Glass

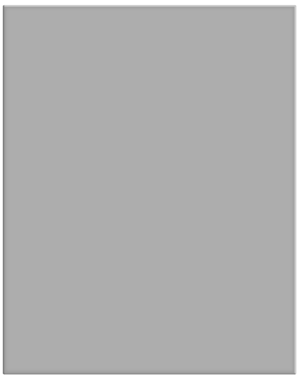

Hampton

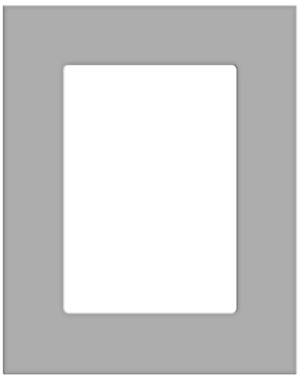

Rio

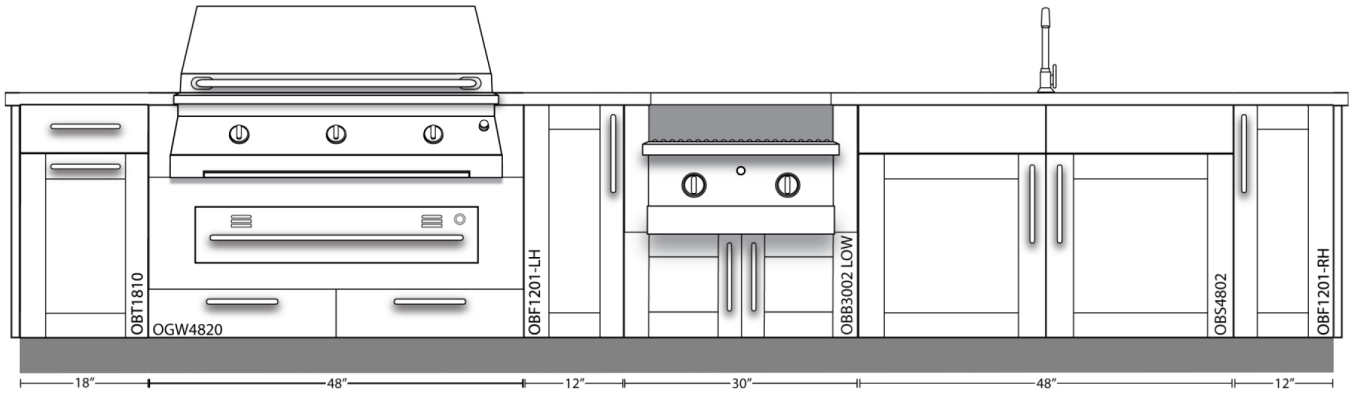

1 Grand Street, Wallingford, CT 06492
Danver.com • BrownJordanOutdoorKitchens.com • Trex-OutdoorKitchens.com